Part Number : 1300140029
Product Description : Mini-Change B-Size Receptacle, 6 Poles, 1/2" - 14 NPT Threads, Male (Straight) to Leads, 0.91m (3.0') Length
Series Number : 130014
Status : Active
Product Category : Circular Industrial Connectors
Engineering Number : 2R6006A20F030

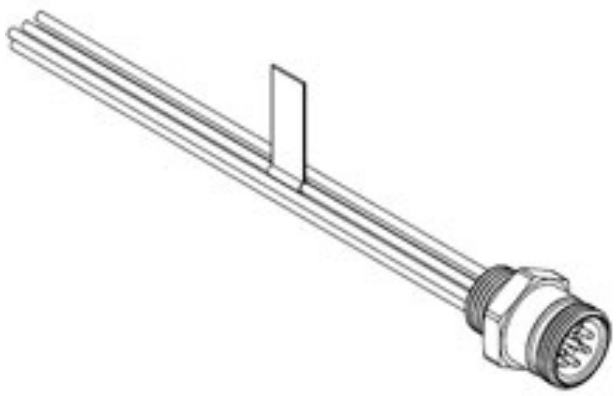

Documents & Resources

Drawings

Drawing_1300140029_sd.pdf

Product Environment Compliance

Compliance

China RoHS	Not Reviewed
EU ELV	Not Reviewed
Low-Halogen Status	Not Reviewed
REACH SVHC	Not Reviewed
EU RoHS	Not Reviewed

Multiple Part Product Compliance Statements

- Eu RoHS
- REACH SVHC
- Low-Halogen

Multiple Part Industry Compliance Documents

- IPC 1752A Class C
- IPC 1752A Class D
- Molex Product Compliance Declaration
- IEC-62474
- chemSHERPA (xml)

EU RoHS Certificate of Compliance

Part Details

General

Status	Active
Category	Circular Industrial Connectors
Series	130014
Description	Mini-Change B-Size Receptacle, 6 Poles, 1/2" - 14 NPT Threads, Male (Straight) to Leads, 0.91m (3.0') Length
Comments	B-Size (1" - 16 UN-2A)
IP Rating	IP67
NEMA Rating	NEMA 6
Product Family	Brad Mini-Change Connectors
Product Name	Mini-Change
Type	Single Ended (pigtail)
UPC	78678844918

Agency

CSA	LR6837
UL	E152210

Electrical

Current - Maximum per Contact	8.0A
Voltage - Maximum	600V AC/DC

Physical

Coupling Type	External Thread
Gender	Male
Keyway	Single
Length	0.91m
Material - Component	Zinc Die-Cast with Black Epoxy
Mounting Thread Size	1/2" - 14 NPT
Orientation	Straight
Panel Mount	N/A
Poles	6

Temperature Range - Operating	-20° to +105°C
Wire/Cable Type	N/A
Wire Size (AWG)	16

This document was generated on Oct 11, 2023