Rittal – The System.

Faster – better – everywhere.

Assembly tool for HD cable glands – HD 2410.290

Date : May 24, 2018

ENCLOSURES POWER DISTRIBUTION CLIMATE CONTROL IT INFRASTRUCTURE SOFTWARE & SERVICES

FRIEDHELM LOH GROUP

Assembly tool for HD cable glands – HD 2410.290

created: 24.05.2018 build on www.rittal.com/us-en

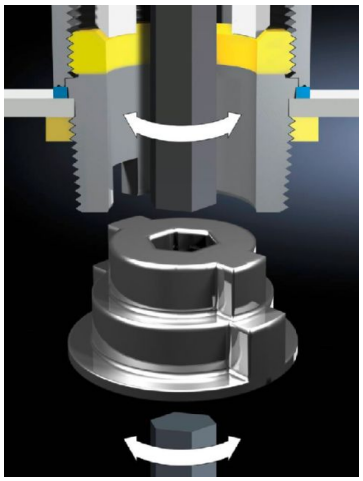

Product description

Description:	To secure HD cable glands in an internal thread or using lock nuts, either from the inside or from the outside using an Allen key.
Supply includes:	Adapter for sizes from M12 - M25

Product features

Packaging unit:	1 pc(s).
Weight/packaging unit:	0.03 kg (0.1 lb.)
EAN:	4028177552210
Customs tariff number:	73181900
ETIM 6.0:	EC000441
ETIM 5.0:	EC000441
eCl@ss 8.0/8.1:	27149109
eCl@ss 7.0/7.1:	27189265
eCl@ss 6.0/6.1:	27189265
eCl@ss 5.1/5.1.4:	27189222

Â© Rittal 2018

Product description (long):	HD Assembly tool, for HD cablegland

Approvals

Certificates:	EAC