TABLE OF CONTENTS

Bare Copper ..... **3 – 6**
Solid *3*
Plater *4*
Stranded ..... *5 – 6*

Single Conductor ..... **7 – 27**
XHHW-2 ..... *7 – 9*
SIS *10*
USE-2/RHH/RHW-2 ..... *11 – 13*
Jacketed Singles ..... *14 – 17*
Photovoltaic Wire ..... *18 – 22*
THW and THW-2 ..... *23 – 24*
Weatherproof Line Wire *25*
Cathodic Protection *26*
Transformer Riser Wire *27*

Twisted Cables ..... **28 – 36**
ServicePlex® ..... *28 – 29*
Copper Service Drop *30*
400 Hz Cable ..... *31 – 32*
Preassembled Aerial ..... *33 – 36*

Tray and Power Cables ..... **37 – 56**
SER/SEU ..... *37 – 38*
Tray Cable ..... *39 – 48*
Shielded Tray Cable ..... *49 – 54*
Power Cable ..... *55 – 56*

ASD/VFD ServiceDrive® System ..... **57 – 70**
Tray Cable ..... *57 – 59*
Tray Connectors ..... *60 – 61*
Tray Termination Kits *62*
Tray Selection Guide *63*
Armor Cable ..... *64 – 66*
Armor Connectors ..... *67 – 68*
Armor Termination Kits *69*
Armor Selection Guide *70*

Armored Cables ..... **71 – 89**
Feeder MC Cable and Connectors ..... *71 – 73*
Jacketed MC Cable and Connectors ..... *74 – 79*
EnviroPlus® Armor (LSZH) ..... *80 – 82*
2KV MC ..... *83 – 84*
ServiceTeck® (Teck90) Cable and Connectors ..... *85 – 87*
Medium Voltage MC ..... *88 – 89*

Pump Cable ..... **90 – 96**
Irrigation Cable ..... **97 – 101**
Contact Wire ..... **102 – 105**
Messenger for Aerial **106**
Color Codes **107**
Minimum Bending Radii **108**
Maximum Pull Tensions **109**
Sheave Selection Chart **110**
Cable Installation Tips ..... **111 – 113**
Conversion Factors **114**
Terms and Conditions ..... **115 – 116**

Due to continual changes in industry standards, the most current product specifications can be found on our online catalog at servicewire.com.

servicewire.com

Phoenix, AZ
877-623-9473

Culloden, WV
800-624-3572

Houston, TX
800-231-9473

Due to continual changes in industry standards, the most current product specifications can be found on our online catalog at servicewire.com.

ServiceWire Co.
Manufacturing quality. Delivering service.

BARE COPPER

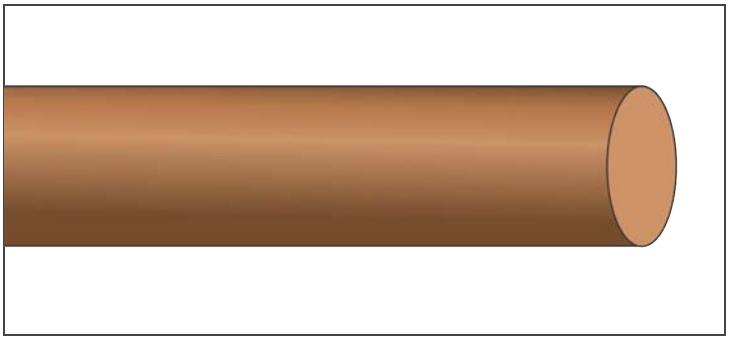

SOLID CONDUCTOR

Bare or Tinned

Soft (Annealed), Medium Hard, Hard Drawn

ISO 9001:2008 RoHS COMPLIANT Made in the USA REACH

Description:

Soft Drawn: Easily formed into place.
Hard Drawn: Higher tensile strength. Retains Shape. More difficult to form.

Application:

Suitable for use in electrical grounding systems and on insulators for overhead transmission and distribution applications.

Standards:

ASTM Standards: B-1 *(hard drawn)*, B-2 *(medium hard drawn)*, B-3 *(soft or annealed)*, B-33 *(tinned)*
REA/RUS Approved
Federal Standard QQ-W-343
RoHS Compliant

Part Number	Size (AWG)	Nominal Diameter (in.)	Approx. Net Weight (lb./1000')	HARD DRAWN Min. Breaking Strength (lbs.)	HARD DRAWN DC Resistance (OHMS/1000') @20°C	MED HARD DRAWN Min. Breaking Strength (lbs.)	MED HARD DRAWN DC Resistance (OHMS/1000') @20°C	SOFT (BARE) DC Resistance (OHMS/1000') @20°C	SOFT (TINNED) DC Resistance (OHMS/1000') @20°C	Ampacity*
BSOS18	18	0.0403	4.92	85	6.6400	67	6.6100	6.3900	6.6400	-
BSOS16	16	0.0508	7.82	135	4.1800	106	4.1600	4.0200	4.1800	-
BSOS14	14	0.0641	12.43	214	2.6300	167	2.6100	2.5200	2.6200	-
BSOS12	12	0.0808	19.77	337	1.6500	262	1.6400	1.5900	1.6500	-
BSOS10	10	0.1019	31.43	529	1.0390	410	1.0330	0.9988	1.0430	-
BSOS8	8	0.1285	49.98	826	0.6532	644	0.6498	0.6281	0.6426	98
BSOS6	6	0.1620	79.46	1,280	0.4110	1,010	0.4088	0.3952	0.4109	124
BSOS4	4	0.2043	126.40	1,970	0.2584	1,584	0.2571	0.2485	0.2528	155
BSOS2	2	0.2576	200.90	3,002	0.1625	2,450	0.1617	0.1563	0.1580	209
BSOS1	1	0.2893	253.30	3,688	0.1289	3,024	0.1282	0.1239	-	-
BSOS1/0	1/0	0.3249	319.50	4,518	0.1011	3,731	0.1016	0.0982	-	282
BSOS2/0	2/0	0.3648	402.80	5,519	0.0802	4,600	0.0798	0.0779	-	329
BSOS3/0	3/0	0.4096	507.80	6,720	0.0636	5,666	0.0633	0.0618	-	382
BSOS4/0	4/0	0.4600	640.50	8,143	0.0504	6,980	0.0502	0.0490	-	444

**Per NEC Table 310.15 (B)(21). Based on conductor temperature of 80°C; ambient temperature of 40°C; 2 ft./sec. wind. **Ref ASTM B-787 NOTE: The data shown is approximate and subject to standard industry tolerance.*

servicewire.com

Phoenix, AZ
877-623-9473

Culloden, WV
800-624-3572

Houston, TX
800-231-9473

Service Wire Co.
Manufacturing quality. Delivering service.

BARE COPPER

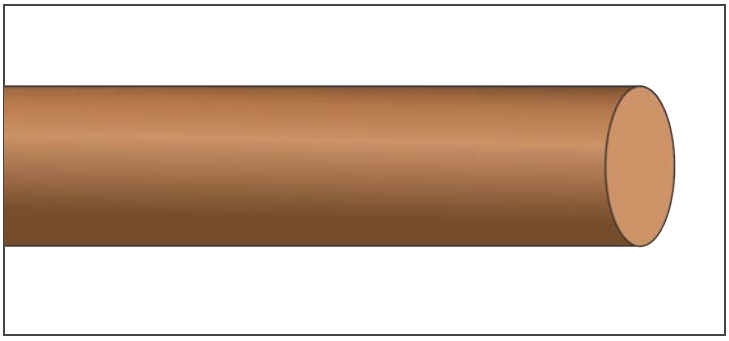

PLATER WIRE

ISO 9001:2008 RoHS COMPLIANT Made in the USA REACH

Description:
Solid soft drawn or hard drawn bare copper.
Packaged on convenient spools *(per ASTM B49)*.

Soft Drawn: Easily formed into place.
Hard Drawn: Higher tensile strength. Retains Shape. More difficult to form.

Application:
Suitable for use as a hanger in the electro-plating industry. Highest conductivity per unit area of all commercially available metals used to conduct electricity. Easily welded and soldered.

Standards:
ASTM Standards: B-1 *(hard drawn)*, B-3 *(soft or annealed)*, B-49 *(copper rod)*
RoHS Compliant

Part Number	Solid Conductor (AWG)	Approximate (ft./lb.)	Standard Put-up Per Carton	Standard Packaging	Weight (lb./1000')
PLATER24	24	818	6 x 10 lb. Spools	60	1.2
PLATER22	22	514	6 x 10 lb. Spools	60	1.9
PLATER20	20	323	6 x 10 lb. Spools	60	3.1
PLATER16	16	128	6 x 10 lb. Spools	60	7.8
PLATER14	14	81	2 x 25 lb. Spools	50	12.4
PLATER12	12	51	2 x 25 lb. Spools	50	19.8
PLATER10	10	32	2 x 25 lb. Spools	50	31.4
PLATER8	8	20	2 x 25 lb. Spools	50	50.0
PLATER6	6	13	2 x 25 lb. Spools	50	79.4
PLATER4	4	8	2 x 25 lb. Spools	50	126.3
PLATER2	2	5	2 x 25 lb. Spools	50	200.9

NOTE: The data shown is approximate and subject to standard industry tolerances.

servicewire.com

Phoenix, AZ
877-623-9473

Culloden, WV
800-624-3572

Houston, TX
800-231-9473

ServiceWire Co.
Manufacturing quality. Delivering service.

BARE COPPER

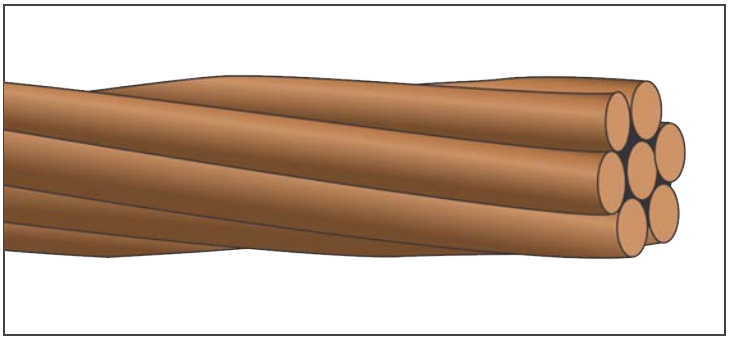

STRANDED CONDUCTOR

Bare or Tinned

Soft (Annealed), Medium Hard, Hard Drawn

#16 AWG - 4/0 AWG

ISO 9001:2008 RoHS COMPLIANT Made in the USA REACH

Description:

Stranded conductors offer greater flexibility than solid.

Application:

Suitable for use in electrical grounding systems *(including counterpoise grounding)* and on insulators for overhead transmission and distribution applications.

Standards:

ASTM Standards: B-1 *(hard drawn)*, B-2 *(medium hard drawn)*, B-3 *(soft or annealed)*, B-8 *(concentric lay stranded)*, B-33 *(tinned)*, B-787 *(combination strand)*

REA/RUS Approved

Federal Standard QQ-W-343

RoHS Compliant

Part Number	Size (AWG)	Strand (no.)	Stranding Class	Nominal Diameter (in.)	Approx. Net Weight (lb./1000')	HARD DRAWN Min. Breaking Strength (lbs.)	HARD DRAWN DC Resistance (OHMS/1000') @ 20°C	MED HARD DRAWN Min. Breaking Strength (lbs.)	MED HARD DRAWN DC Resistance (OHMS/1000') @ 20°C	SOFT (BARE) DC Resistance (OHMS/1000') @ 20°C	SOFT (TINNED) DC Resistance (OHMS/1000') @ 20°C	Ampacity*
BST26S16	16	26	K	0.058	7.97	124.7	4.2590	100.4	4.2370	4.0960	4.1100	-
BST7S14	14	7	B	0.073	12.70	197.1	2.6790	157.7	2.6650	2.5800	2.6800	-
BST7S12	12	7	B	0.092	20.20	311.1	1.6850	247.7	1.6760	1.6200	1.6900	-
BST7S10	10	7	B	0.115	32.00	491.7	1.0600	388.9	1.0540	1.0200	1.0600	-
BST7S8	8	7	B	0.143	50.90	777.0	0.6663	610.0	0.6629	0.6408	0.6654	98
BST7S6	6	7	B	0.181	81.00	1,228.0	0.4191	959.0	0.4169	0.4030	0.4196	124
BST7S4	4	7	A,B	0.230	128.90	1,938.0	0.2636	1,505.0	0.2622	0.2540	0.2637	155
BST7S3	3	7	A,B	0.254	162.50	2,433.0	0.2090	1,885.0	0.2079	0.2010	0.2086	-
BST3S2	2	3	AA	0.320	202.90	2,912.0	0.1641	2,298.0	0.1633	0.1578	-	209
BST7S2	2	7	A,B	0.284	204.90	3,050.0	0.1660	2,360.0	0.1650	0.1594	0.1657	209
BST7S1	1	7	A,AA	0.328	258.40	3,801.0	0.1316	2,955.0	0.1309	0.1265	0.1302	-
BST19S1	1	19	B**	0.316	258.40	3,902.0	0.1316	3,039.0	0.1309	0.1265	0.1313	-
BST7S1/0	1/0	7	A,AA	0.368	325.80	4,752.0	0.1042	3,705.0	0.1037	0.1002	0.1031	282
BST19S1/0	1/0	19	B**	0.357	325.80	4,897.0	0.1042	3,802.0	0.1037	0.1003	0.1043	282
BST7S2/0	2/0	7	A,AA	0.414	410.90	5,927.0	0.0826	4,640.0	0.0822	0.0795	0.0818	329
BST19S2/0	2/0	19	B**	0.402	410.90	6,153.0	0.0826	4,765.0	0.0822	0.0795	0.0826	329
BST7S3/0	3/0	7	A,AA	0.464	518.10	7,360.0	0.0655	5,812.0	0.0652	0.0631	0.0649	382
BST19S3/0	3/0	19	B**	0.450	518.10	7,702.0	0.0655	5,973.0	0.0652	0.0631	0.0655	382
BST7S4/0	4/0	7	A,AA	0.522	653.30	9,154.0	0.0519	7,278.0	0.0517	0.0499	-	444
BST19S4/0	4/0	19	B**	0.509	653.30	9,617.0	0.0519	7,479.0	0.0517	0.0500	0.0515	444
BST61S4/0	4/0	61	D	0.530	653.30	9,903.0	0.0519	7,728.0	0.0517	0.0500	0.0520	444

**Per NEC Table 310.15 (B)(21). Based on conductor temperature of 80°C; ambient temperature of 40°C; 2 ft./sec. wind. **Ref ASTM B-787 NOTE: The data shown is approximate and subject to standard industry tolerance.*

servicewire.com

Phoenix, AZ
877-623-9473

Culloden, WV
800-624-3572

Houston, TX
800-231-9473

Service Wire Co.
Manufacturing quality. Delivering service.

BARE COPPER

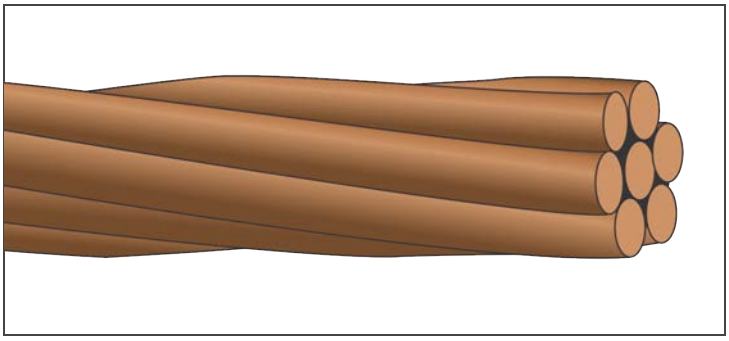

STRANDED CONDUCTOR

Bare or Tinned

Soft (Annealed), Medium Hard, Hard Drawn

250 Kcmil - 1,000 Kcmil

ISO 9001:2008 RoHS COMPLIANT Made in the USA REACH

Description:

Stranded conductors offer greater flexibility than solid.

Application:

Suitable for use in electrical grounding systems *(including counterpoise grounding)* and on insulators for overhead transmission and distribution applications.

Standards:

ASTM Standards: B-1 *(hard drawn)*, B-2 *(medium hard drawn)*, B-3 *(soft or annealed)*, B-8 *(concentric lay stranded)*, B-33 *(tinned)*
REA/RUS Approved
Federal Standard QQ-W-343
RoHS Compliant

Part Number	Size (Kcmil)	Strand (no.)	Stranding Class	Nominal Diameter (in.)	Approx. Net Weight (lb./1000')	HARD DRAWN Min. Breaking Strength (lbs.)	HARD DRAWN DC Resistance (OHMS/1000') @ 20°C	MED HARD DRAWN Min. Breaking Strength (lbs.)	MED HARD DRAWN DC Resistance (OHMS/1000') @ 20°C	SOFT (BARE) DC Resistance (OHMS/1000') @ 20°C	SOFT (TINNED) DC Resistance (OHMS/1000') @ 20°C	Ampacity*
BST19S250	250	19	A	0.574	771.90	11,360	0.0440	8,836	0.0438	0.0423	0.0435	494
BST37S250	250	37	B	0.572	771.90	11,600	0.0440	8,952	0.0438	0.0423	0.0440	494
BST19S300	300	19	A	0.629	926.30	13,510	0.0366	10,530	0.0365	0.0352	0.0363	556
BST37S300	300	37	B	0.629	926.30	13,855	0.0366	10,732	0.0365	0.0353	0.0367	556
BST19S350	350	19	A	0.678	1,081.00	15,590	0.0314	12,200	0.0313	0.0302	0.0311	-
BST37S350	350	37	B	0.676	1,081.00	16,070	0.0314	12,462	0.0313	0.0302	0.0314	-
BST19S400	400	19	A,AA	0.726	1,235.00	17,810	0.0275	13,950	0.0273	0.0264	0.0272	-
BST37S400	400	37	B	0.721	1,235.00	18,331	0.0275	14,144	0.0273	0.0264	0.0272	-
BST19S500	500	19	AA	0.811	1,544.00	21,942	0.0220	17,313	0.0219	0.0212	0.0218	773
BST37S500	500	37	A,B	0.796	1,544.00	22,495	0.0220	17,517	0.0219	0.0212	0.0218	773
BST61S600	600	61	B	0.887	1,853.00	27,530	0.0183	21,350	0.0182	0.0176	0.0181	-
BST37S750	750	37	AA	0.997	2,316.00	33,411	0.0146	26,162	0.0146	0.0141	0.0145	1,000
BST61S750	750	61	A,B	0.985	2,316.00	34,090	0.0146	26,510	0.0146	0.0141	0.0145	1,000
BST37S1000	1000	37	AA	1.152	3,088.00	43,826	0.0110	34,396	0.0109	0.0106	0.0109	1,193
BST61S1000	1000	61	A,B	1.152	3,088.00	45,030	0.0110	35,100	0.0109	0.0106	0.0109	1,193

**Per NEC Table 310.15 (B)(21). Based on conductor temperature of 80°C; ambient temperature of 40°C; 2 ft./sec. wind. NOTE: The data shown is approximate and subject to standard industry tolerances.*

servicewire.com

Phoenix, AZ
877-623-9473

Culloden, WV
800-624-3572

Houston, TX
800-231-9473

SINGLE CONDUCTOR

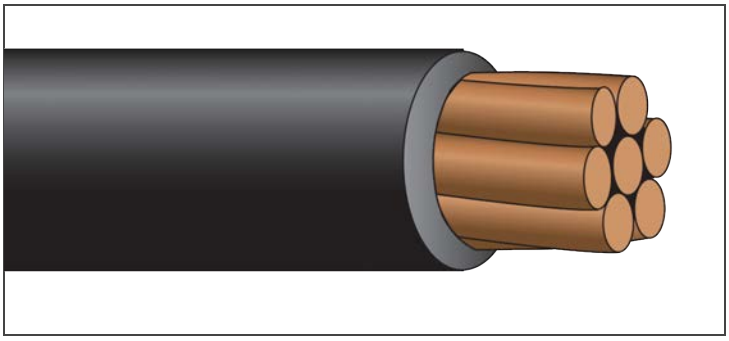

SERVICEPRO-X™

XHHW-2

600/1,000 Volt Copper, CT Rated

No Pulling Lubricant Required

ISO 9001: 2015 RoHS COMPLIANT Made in the USA REACH

Description:

Single copper conductor, stranded and insulated with moisture, heat and flame resistant, chemically crosslinked polyethylene. ServicePRO-X™ No Pulling Lubricant Required *(6 AWG and larger)*. ***Available in colors.***

Application:

Suitable for general purpose wiring, for power distribution and branch circuit wiring where a cable having superior flame retardance is required. Suitable for use in 105°C dry systems. Also suitable for use in low leakage circuits requiring a dielectric constant of 3.5 or less *(Hospital Grade)*.

Standards:

ASTM Standards: B-3 *(soft or annealed)*, B-8 *(concentric lay stranded)*, B-787 *(combination strand)*
UL 44
ICEA S-95-658/NEMA WC-70
Federal Spec. A-A-59544
Flame Rated: CT Use *(1/0 AWG and larger)*
Temperature Rated at 90°C Wet/Dry
Cold Temperature Rated at -40°C
Sunlight Resistant, Gasoline and Oil Resistant II
Appliance Wiring Material: Style 3578
RoHS Compliant

Part Number	Size (AWG or Kcmil)	Strand (no.)	Insulation Thickness (mils)	Nominal Diameter Overall (in.)	Approx. Net Weight (lb./1000')	Ampacity* 90°C Wet/Dry
XH14BK	14	7	30	0.133	18	35†
XH12BK	12	7	30	0.152	27	40†
XH10BK	10	7	30	0.175	39	55†
XH8BK	8	7	45	0.233	64	80
XH6BK	6	7	45	0.271	97	105
XH4BK	4	7	45	0.320	149	140
XH3BK	3	7	45	0.344	185	165
XH2BK	2	7	45	0.374	230	190
XH1BK	1	19	55	0.426	291	220
XH1/0BK	1/0	19	55	0.467	366	260
XH2/0BK	2/0	19	55	0.512	456	300
XH3/0BK	3/0	19	55	0.560	569	350
XH4/0BK	4/0	19	55	0.619	711	405
XH250BK	250	37	65	0.702	835	455
XH300BK	300	37	65	0.759	996	500
XH350BK	350	37	65	0.806	1,155	570
XH400BK	400	37	65	0.851	1,314	615
XH500BK	500	37	65	0.926	1,631	700
XH600BK	600	61	80	1.047	1,967	780
XH750BK	750	61	80	1.145	2,441	885
XH1000BK	1,000	61	80	1.150	3,233	1,055

**Per NEC Table 310.15 (B)(17). †The overcurrent protection for items marked with an obelisk (†) shall not exceed 15 amps for #14 AWG, 20 amps for #12 AWG, and 30 amps for #10 AWG per NEC 310-17 footnote. NOTE: The data shown is approximate and subject to standard industry tolerances.*

SINGLE CONDUCTOR

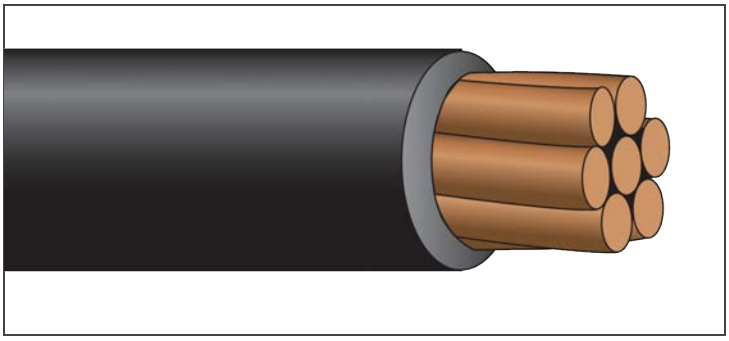

SERVICEPRO-X™

XHHW-2

600/1,000 Volt Copper, VW-1, CT Rated

No Pulling Lubricant Required

Description:

Single copper conductor, stranded and insulated with moisture, heat and flame resistant, chemically crosslinked polyethylene. ServicePRO-X™ No Pulling Lubricant Required *(6 AWG and larger)*. ***Available in colors.***

Application:

Suitable for general purpose wiring, for power distribution and branch circuit wiring where a cable having superior flame retardance is required. Suitable for use in 105°C dry systems. Also suitable for use in low leakage circuits requiring a dielectric constant of 3.5 or less *(Hospital Grade)*.

Standards:

ASTM Standards: B-3 *(soft or annealed)*, B-8 *(concentric lay stranded)*, B787 *(combination strand)*
UL 44
ICEA S-95-658/NEMA WC-70
Federal Spec. A-A-59544
Flame Rated: VW-1 *(all sizes)*, CT Use/IEEE 1202 *(1/0 AWG and larger)*, FT-4 *(1/0 AWG and larger)*
Temperature Rated at 90°C Wet/Dry
Cold Temperature Rated at -40°C
Sunlight Resistant *(#6 AWG and larger)*, Gasoline and Oil Resistant II
Appliance Wiring Material: Style 3578
RoHS Compliant

Part Number	Size (AWG or Kcmil)	Strand (no.)	Insulation Thickness (mils)	Nominal Diameter Overall (in.)	Approx. Net Weight (lb./1000')	Ampacity* 90°C Wet/Dry
XHVW14BK	14	7	30	0.133	19	35†
XHVW12BK	12	7	30	0.152	28	40†
XHVW10BK	10	7	30	0.175	41	55†
XHVW8BK	8	7	45	0.233	66	80
XHVW6BK	6	7	45	0.271	102	105
XHVW4BK	4	7	45	0.320	155	140
XHVW3BK	3	7	45	0.344	185	165
XHVW2BK	2	7	45	0.374	238	190
XHVW1BK	1	19	55	0.426	301	220
XHVW1/0BK	1/0	19	55	0.467	374	260
XHVW2/0BK	2/0	19	55	0.512	465	300
XHVW3/0BK	3/0	19	55	0.560	579	350
XHVW4/0BK	4/0	19	55	0.619	723	405
XHVW250BK	250	37	65	0.702	850	455
XHVW300BK	300	37	65	0.759	997	500
XHVW350BK	350	37	65	0.806	1,173	570
XHVW400BK	400	37	65	0.851	1,314	615
XHVW500BK	500	37	65	0.926	1,651	700
XHVW600BK	600	61	80	1.047	1,972	780
XHVW750BK	750	61	80	1.145	2,444	885
XHVW1000BK	1000	61	80	1.150	3,237	1055

**Per NEC Table 310.15 (B)(17). †The overcurrent protection for items marked with an obelisk (†) shall not exceed 15 amps for #14 AWG, 20 amps for #12 AWG, and 30 amps for #10 AWG per NEC 310-17 footnote. NOTE: The data shown is approximate and subject to standard industry tolerances.*

SINGLE CONDUCTOR

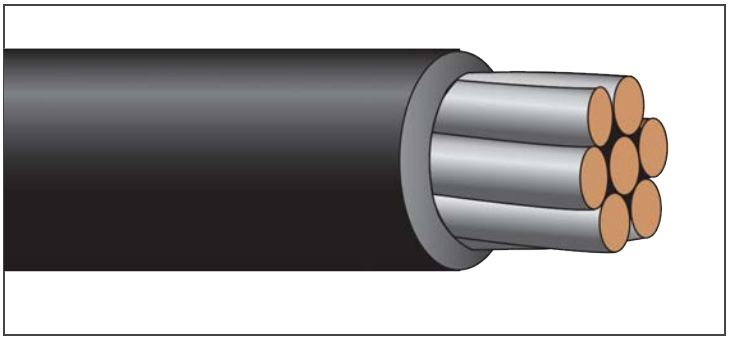

SERVICEPRO-X™

XHHW-2 or RW90

600/1,000 Volt Copper, VW-1/FT-1, Tinned, CT Rated

No Pulling Lubricant Required

Description:

Single tinned copper conductor, stranded and insulated with moisture, heat and flame resistant, chemically crosslinked polyethylene. ServicePRO-X™ enhanced surface for ease of pulling *(6 AWG and larger)*. ***Available in colors.***

Application:

Suitable for general purpose wiring, for power distribution and branch circuit wiring, where a cable having superior flame retardance is required. Suitable for use in 105°C dry systems. Also suitable for use in low leakage circuits requiring a dielectric constant of 3.5 or less *(Hospital Grade)*.

Standards:

ASTM Standards: B-3 *(soft or annealed)*, B-8 *(concentric lay stranded)*, B-33 *(tinned)*, B787 *(combination strand)*
UL 44, C(UL) US RW90:CSA/UL Listed
ICEA S-95-658/NEMA WC-70
Federal Spec. A-A-59544
Flame Rated: VW-1/FT-1 *(all sizes)*, CT Use/IEEE1202 *(1/0 AWG and larger)*, FT-4 *(1/0 AWG and larger)*
Temperature Rated at 90°C Wet/Dry
Cold Temperature Rated at -40°C
Sunlight Resistant *(#6 AWG and larger)*, Gasoline and Oil Resistant II
Appliance Wiring Material: Style 3578
RoHS Compliant

Part Number	Size (AWG or Kcmil)	Strand (no.)	Insulation Thickness (mils)	Nominal Diameter Overall (in.)	Approx. Net Weight (lb./1000')	Ampacity* 90°C Wet/Dry
XHVWT14BK	14	7	30	0.133	19	35†
XHVWT12BK	12	7	30	0.152	28	40†
XHVWT10BK	10	7	30	0.175	41	55†
XHVWT8BK	8	7	45	0.233	66	80
XHVWT6BK	6	7	45	0.271	102	105
XHVWT4BK	4	7	45	0.320	155	140
XHVWT3BK	3	7	45	0.344	185	165
XHVWT2BK	2	7	45	0.374	238	190
XHVWT1BK	1	19	55	0.426	301	220
XHVWT1/0BK	1/0	19	55	0.467	374	260
XHVWT2/0BK	2/0	19	55	0.512	465	300
XHVWT3/0BK	3/0	19	55	0.560	579	350
XHVWT4/0BK	4/0	19	55	0.619	723	405
XHVWT250BK	250	37	65	0.702	850	455
XHVWT300BK	300	37	65	0.759	997	500
XHVWT350BK	350	37	65	0.806	1,173	570
XHVWT400BK	400	37	65	0.851	1,314	615
XHVWT500BK	500	37	65	0.926	1,651	700
XHVWT600BK	600	61	80	1.047	1,972	780
XHVWT750BK	750	61	80	1.145	2,444	885

**Per NEC Table 310.15 (B)(17). †The overcurrent protection for items marked with an obelisk (†) shall not exceed 15 amps for #14 AWG, 20 amps for #12 AWG, and 30 amps for #10 AWG per NEC 310-17 footnote. NOTE: The data shown is approximate and subject to standard industry tolerances.*

servicewire.com

Phoenix, AZ
877-623-9473

Culloden, WV
800-624-3572

Houston, TX
800-231-9473

SINGLE CONDUCTOR

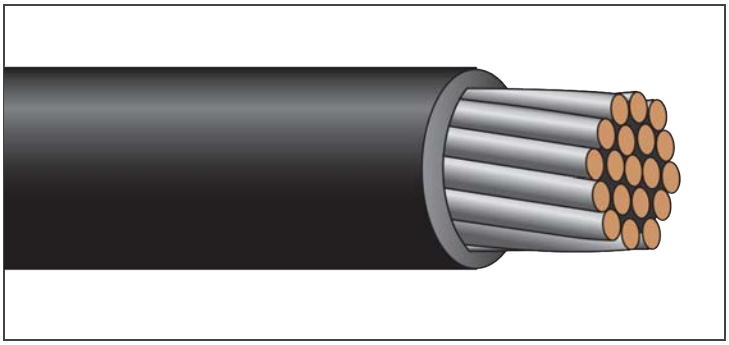

SWITCHBOARD WIRE

SIS or RW90

600/1,000 Volt Copper

ISO 9001:2008 RoHS COMPLIANT Made in the USA REACH

Description:

Single copper conductor, tinned, stranded and insulated with moisture and heat resistant, chemically crosslinked polyethylene. ***Available in colors.***

Application:

Suitable for use in 105°C dry systems.

Standards:

UL 44, C(UL)US: CSA/UL Listed *(#14 AWG and larger)*
ICEA S-95-658/NEMA WC-70
Federal Spec. A-A-59544
Flame Rated: UL 1581, Vertical Flame *(VW1: #14 AWG and larger)*
Dual Rated Type XHHW-2 *(#14 AWG and larger)*,
UL 66 Fixture Wire *(#16 AWG)*
Temperature Rated at 90°C Wet/Dry
Cold Temperature Rated at -40°C
Sunlight Resistant *(#16 AWG and #6 AWG),* Gasoline and Oil Resistant II
RoHS Compliant

Flex-Strand Catalog Number	Size (AWG)	Stranding Flex-Strand (no.)	Stranding Class B (no.)	Insulation Thickness (mils)	Nominal Diameter Overall (in.)	Approx. Net Weight (lb./1000')	Ampacity** (30°C ambient) 90°C Wet/Dry
SIST16	16*	26	7	30	0.121	12	8
SIST14VW	14	41	7	30	0.139	19	25***
SIST12VW	12	65	7	30	0.158	27	30***
SIST10VW	10	104	7	30	0.182	40	40***
SIST8VW	8	133	7	45	0.238	67	55
SIST6VW	6	133	7	45	0.274	100	75

**#16 AWG is FFH-2. NOTE: Copper Conductor available Non-Tinned.*
***Per NEC Table 310.15 (B)(17).*
****The overcurrent protection for items marked "****" shall not exceed 15 amps for #14 AWG, 20 amps for #12 AWG, and 30 amps for #10 AWG per NEC 310-16 footnote.*
NOTE: The data shown is approximate and subject to standard industry tolerances.

servicewire.com

Phoenix, AZ
877-623-9473

Culloden, WV
800-624-3572

Houston, TX
800-231-9473

SINGLE CONDUCTOR

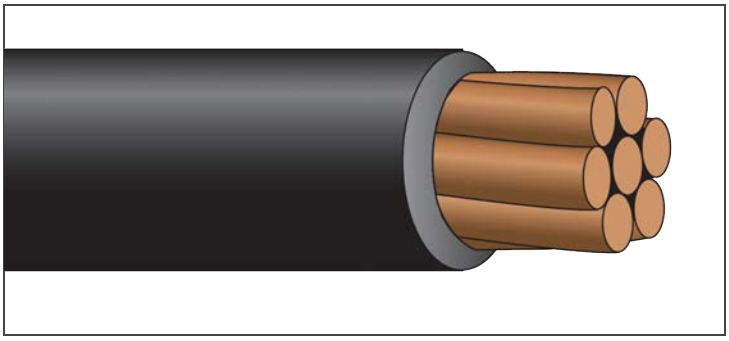

SERVICEPRO-X™

USE-2/RHW-2

600/1,000 Volt Copper, CT Rated

No Pulling Lubricant Required

Description:

Single copper conductor, stranded and insulated with moisture and heat resistant, chemically crosslinked polyethylene. ServicePRO-X™ No Pulling Lubricant Required *(6 AWG and larger)*. ***Available in colors.***

Application:

Suitable for use in general purpose wiring applications and may be installed in raceway, conduit, direct burial and aerial installations where a cable having superior flame retardance is required. Suitable for use in 105°C dry systems. Also suitable for use in low leakage circuits requiring a dielectric constant of 3.5 or less *(Hospital Grade)*.

Standards:

ASTM Standards: B-3 *(soft or annealed)*, B-8 *(concentric lay stranded)*, B787 *(combination strand)*
UL 44 and UL 854
ICEA S-95-658/NEMA WC-70
L-824C *(#12 AWG - 4/0 AWG)*
Federal Spec. A-A-59544
Flame Rated: CT Use *(1/0 AWG and larger)*
Temperature Rated at 90°C Wet/Dry
Cold Temperature Rated at -40°C
Sunlight Resistant, Gasoline and Oil Resistant II
Direct Burial
RoHS Compliant

Part Number	Size (AWG or Kcmil)	Strand (no.)	Insulation Thickness (mils)	Approx. Diameter Overall (in.)	Aprox. Net Weight (lb./1000')	Ampacity 90ºC Wet/Dry
USE14BK	14	7	45	0.163	21	35†
USE12BK	12	7	45	0.182	30	40†
USE10BK	10	7	45	0.205	43	55†
USE8BK	8	7	60	0.263	69	80
USE6BK	6	7	60	0.301	103	105
USE4BK	4	7	60	0.350	156	140
USE3BK	3	7	60	0.374	192	165
USE2BK	2	7	60	0.404	238	190
USE1BK	1	19	80	0.476	307	220
USE1/0BK	1/0	19	80	0.517	384	260
USE2/0BK	2/0	19	80	0.562	476	300
USE3/0BK	3/0	19	80	0.610	590	350
USE4/0BK	4/0	19	80	0.669	735	405
USE250BK	250	37	95	0.762	868	455
USE300BK	300	37	95	0.819	1,031	500
USE350BK	350	37	95	0.866	1,192	570
USE400BK	400	37	95	0.911	1,353	615
USE500BK	500	37	95	0.986	1,673	700
USE600BK	600	61	110	1.111	2,033	780
USE750BK	750	61	110	1.205	2,493	885
USE1000BK	1000	61	110	1.370	3,292	1055

**Per NEC Table 310.15 (B)(17). †The overcurrent protection for items marked with an obelisk (†) shall not exceed 15 amps for #14 AWG, 20 amps for #12 AWG, and 30 amps for #10 AWG per NEC 310-17 footnote. NOTE: The data shown is approximate and subject to standard industry tolerances.*

SINGLE CONDUCTOR

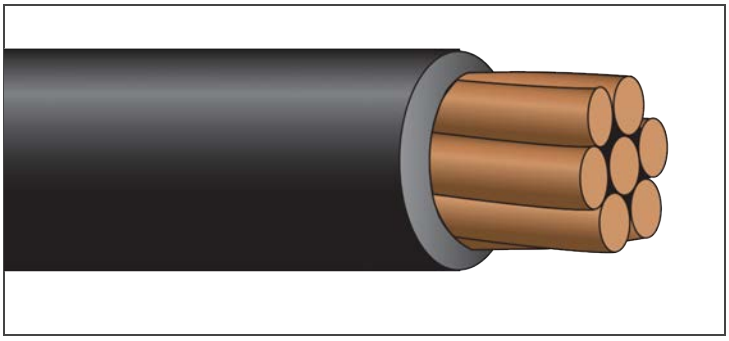

SERVICEPRO-X™

USE-2/RHW-2

600/1,000 Volt Copper, VW-1, CT Rated

No Pulling Lubricant Required

Description:

Single copper conductor, stranded and insulated with moisture and heat resistant, chemically crosslinked polyethylene. ServicePRO-X™ No Pulling Lubricant Required *(6 AWG and larger)*. ***Available in colors.***

Application:

Suitable for use in general purpose wiring applications and may be installed in raceway, conduit, direct burial and aerial installations where a cable having superior flame retardance is required. Suitable for use in 105°C dry systems. Also suitable for use in low leakage circuits requiring a dielectric constant of 3.5 or less *(Hospital Grade)*.

Standards:

ASTM Standards: B-3 *(soft or annealed)*, B-8 *(concentric lay stranded)*, B787 *(combination strand)*
UL 44 and UL 854
ICEA S-95-658/NEMA WC-70
L-824C *(#12 AWG - 4/0 AWG)*
Federal Spec. A-A-59544
Flame Rated: VW-1 *(all sizes)*, CT Use/IEEE 1202 *(1/0 AWG and larger)*, FT-4 *(1/0 AWG and larger)*
Temperature Rated at 90°C Wet/Dry
Cold Temperature Rated at -40°C
Sunlight Resistant *(#6 AWG and larger)*, Gasoline and Oil Resistant II
Direct Burial
RoHS Compliant

Part Number	Size (AWG or Kcmil)	Strand (no.)	Insulation Thickness (mils)	Approx. Diameter Overall (in.)	Approx. Net Weight (lb./1000')	Ampacity* 90°C Wet/Dry
USEVW14BK	14	7	45	0.163	23	35†
USEVW12BK	12	7	45	0.182	32	40†
USEVW10BK	10	7	45	0.205	46	55†
USEVW8BK	8	7	60	0.263	73	80
USEVW6BK	6	7	60	0.301	110	105
USEVW4BK	4	7	60	0.350	164	140
USEVW3BK	3	7	60	0.374	201	165
USEVW2BK	2	7	60	0.404	248	190
USEVW1BK	1	19	80	0.476	321	220
USEVW1/0BK	1/0	19	80	0.517	395	260
USEVW2/0BK	2/0	19	80	0.562	489	300
USEVW3/0BK	3/0	19	80	0.610	605	350
USEVW4/0BK	4/0	19	80	0.669	752	405
USEVW250BK	250	37	95	0.762	902	455
USEVW300BK	300	37	95	0.819	1,067	500
USEVW350BK	350	37	95	0.866	1,217	570
USEVW400BK	400	37	95	0.911	1,391	615
USEVW500BK	500	37	95	0.986	1,702	700
USEVW600BK	600	61	110	1.107	2,073	780
USEVW750BK	750	61	110	1.205	2,554	885
USEVW1000BK	1000	61	110	1.370	3,301	1055

**Per NEC Table 310.15 (B)(17). †The overcurrent protection for items marked with an obelisk (†) shall not exceed 15 amps for #14 AWG, 20 amps for #12 AWG, and 30 amps for #10 AWG per NEC 310-17 footnote. NOTE: The data shown is approximate and subject to standard industry tolerances.*

SINGLE CONDUCTOR

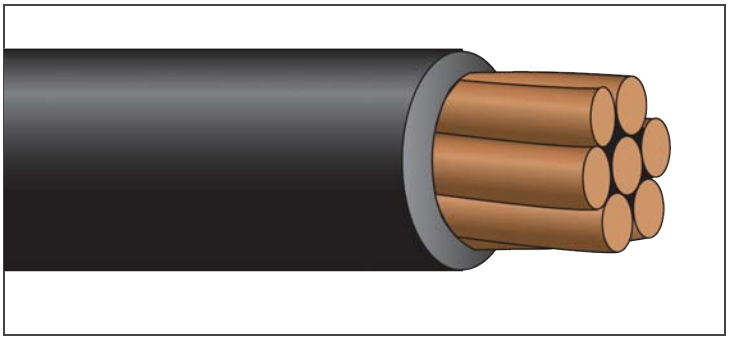

SERVICEPRO-X™

USE-2/RHW-2/RWU90

1,000/2,000 Volt Copper, CT Rated

No Pulling Lubricant Required

ISO 9001:2008 RoHS COMPLIANT Made in the USA REACH

Description:

Single copper conductor, stranded and insulated with moisture and heat resistant crosslinked polyethylene. ServicePRO-X™ enhanced surface for ease of pulling *(6 AWG and larger)*.

Application:

Suitable for wiring in raceways, conduit, etc. Applications include general purpose wiring for power distribution, services, feeders, branch circuit wiring in residential, industrial, and commercial buildings and in photovoltaic systems. Suitable for use in 105°C dry systems. Also suitable for use in low leakage circuits requiring a dielectric constant of 3.5 or less *(Hospital Grade)*. Suitable for use in photovoltaic systems up to 2kV.

Standards:

ASTM Standards: B-3 *(soft or annealed)*, B-8 *(concentric lay stranded)*, B787 *(combination strand)*
UL 44 RHW-2 2kV and UL 4703 *(type PV #6AWG and larger)*
C(UL)US RWU90 1kV: CSA/UL Listed, C(UL) RPVU90 1kV PV Systems
ICEA S-95-658/NEMA WC-70
Federal Spec. A-A-59544
Flame Rated: CT Use *(1/0 AWG and larger)*
Temperature Rated at 90°C Wet/Dry
Cold Temperature Rated at -40°C
Sunlight Resistant, Gasoline and Oil Resistant II
Direct Burial
RoHS Compliant

Part Number	Size (AWG or Kcmil)	Strand (no.)	Insulation Thickness (mils)	Nominal Diameter Overall (in.)	Approx. Net Weight (lb./1000')	Ampacity* 90°C Wet/Dry
RWU14BK	14	7	60	0.19	25	35†
RWU12BK	12	7	60	0.21	35	40†
RWU10BK	10	7	60	0.24	48	55†
RWU8BK	8	7	80	0.30	77	80
RWU6BK	6	7	85	0.35	117	105
RWU4BK	4	7	85	0.40	172	140
RWU3BK	3	7	85	0.42	209	165
RWU2BK	2	7	85	0.45	257	190
RWU1BK	1	19	105	0.53	329	220
RWU1/0BK	1/0	19	105	0.57	404	260
RWU2/0BK	2/0	19	105	0.61	498	300
RWU3/0BK	3/0	19	105	0.66	615	350
RWU4/0BK	4/0	19	105	0.72	762	405
RWU250BK	250	37	120	0.81	898	455
RWU300BK	300	37	120	0.87	1,062	500
RWU350BK	350	37	120	0.92	1,226	570
RWU400BK	400	37	120	0.96	1,387	615
RWU500BK	500	37	120	1.04	1,712	700
RWU600BK	600	61	135	1.16	2,056	780
RWU750BK	750	61	135	1.26	2,540	885

**Based on ambient temperature of 30°C per NEC Table 310.15 (B)(17). †The overcurrent protection for items marked with an obelisk (†) shall not exceed 15 amps for #14 AWG, 20 amps for #12 AWG, and 30 amps for #10 AWG per NEC 310-17 footnote. NOTE: The data shown is approximate and subject to standard industry tolerances.*

SINGLE CONDUCTOR

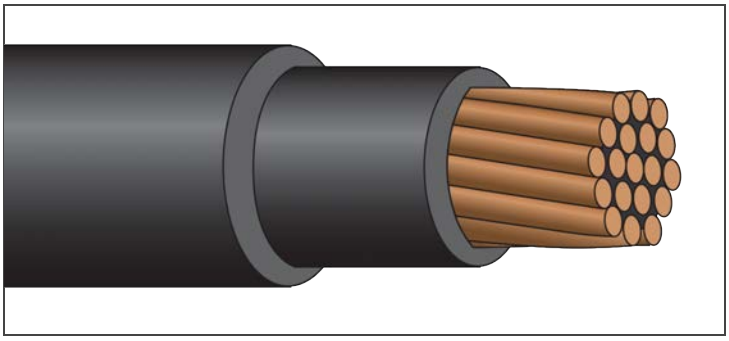

XHHW-2/PVC

600/1,000 Volt Copper

Description:

Single copper conductor, stranded, insulated with moisture and heat resistant, chemically crosslinked polyethylene *(type XHHW-2)* and covered with a sunlight resistant, PVC jacket. ***Available with tinned conductors. Jacket available in colors.***

Standards:

UL 44
ICEA S-95-658/NEMA WC-70
Federal Spec. A-A-59544
Flame Rated: CT Use *(1/0 AWG and larger)*
Temperature Rated at 90°C Wet/Dry
Sunlight Resistant
RoHS Compliant

Part Number	Size (AWG or Kcmil)	Strand (no.)	Insulation Thickness (mils)	Jacket Thickness (mils)	Nominal Diameter Overall (in.)	Approx. Net Weight (lb./1000')	Ampacity* (30°C ambient) 90°C Wet/Dry
XHPVC14	14	7	30	30	0.19	27	25†
XHPVC12	12	7	30	30	0.21	37	30†
XHPVC10	10	7	30	30	0.24	51	40†
XHPVC8	8	7	45	30	0.29	79	55
XHPVC6	6	7	45	30	0.33	114	75
XHPVC4	4	7	45	30	0.38	169	95
XHPVC3	3	7	45	30	0.40	206	115
XHPVC2	2	7	45	30	0.43	253	130
XHPVC1	1	19	55	45	0.52	331	145
XHPVC1/0	1/0	19	55	45	0.56	409	170
XHPVC2/0	2/0	19	55	45	0.60	503	195
XHPVC3/0	3/0	19	55	45	0.65	620	225
XHPVC4/0	4/0	19	55	45	0.71	767	260
XHPVC250	250	37	65	65	0.80	922	290
XHPVC300	300	37	65	65	0.85	1,088	320
XHPVC350	350	37	65	65	0.90	1,253	350
XHPVC400	400	37	65	65	0.95	1,417	380
XHPVC500	500	37	65	65	1.03	1,745	430
XHPVC600	600	61	80	65	1.13	2,090	475
XHPVC750	750	61	80	65	1.23	2,577	535

**Per NEC Table 310.15 (B)(16). †The overcurrent protection for items marked with an obelisk (†) shall not exceed 15 amps for #14 AWG, 20 amps for #12 AWG and 30 amps for #10 AWG per NEC 310-17 footnote. NOTE: The data shown is approximate and subject to standard industry tolerances.*

servicewire.com

Phoenix, AZ
877-623-9473

Culloden, WV
800-624-3572

Houston, TX
800-231-9473

SINGLE CONDUCTOR

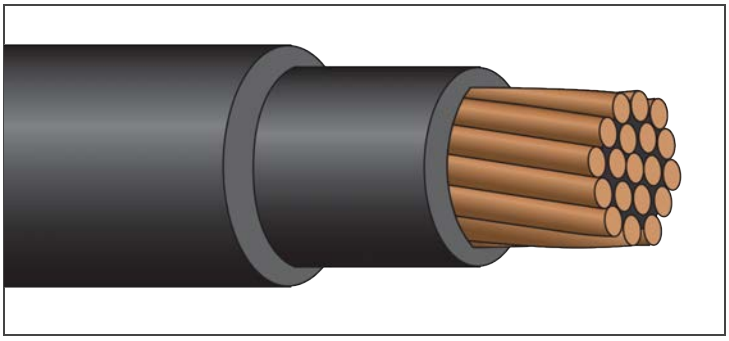

XHHW-2/SERVICECPE®

600/1,000 Volt Copper

ISO 9001: 2015 RoHS COMPLIANT Made in the USA REACH

Description:

Single copper conductor, stranded, insulated with moisture and heat resistant, chemically crosslinked polyethylene *(type XHHW-2)* and covered with a sunlight resistant, CPE jacket. ***Available with tinned conductors.***

Standards:

UL 44
ICEA S-95-658/NEMA WC-70
Federal Spec. A-A-59544
Flame Rated: CT Use *(1/0 AWG and larger)*
Temperature Rated at 90°C Wet/Dry
Sunlight Resistant
RoHS Compliant

Part Number	Size (AWG or Kcmil)	Strand (no.)	Insulation Thickness (mils)	Jacket Thickness (mils)	Nominal Diameter Overall (in.)	Approx. Net Weight (lb./1000')	Ampacity* (30°C ambient) 90°C Wet/Dry
XHCPE14	14	7	30	30	0.19	27	25†
XHCPE12	12	7	30	30	0.21	37	30†
XHCPE10	10	7	30	30	0.24	51	40†
XHCPE8	8	7	45	30	0.29	79	55
XHCPE6	6	7	45	30	0.33	115	75
XHCPE4	4	7	45	30	0.38	169	95
XHCPE3	3	7	45	30	0.40	206	115
XHCPE2	2	7	45	30	0.43	253	130
XHCPE1	1	19	55	45	0.52	332	145
XHCPE1/0	1/0	19	55	45	0.56	409	170
XHCPE2/0	2/0	19	55	45	0.60	504	195
XHCPE3/0	3/0	19	55	45	0.65	621	225
XHCPE4/0	4/0	19	55	45	0.71	768	260
XHCPE250	250	37	65	65	0.80	923	290
XHCPE300	300	37	65	65	0.85	1,090	320
XHCPE350	350	37	65	65	0.90	1,255	350
XHCPE400	400	37	65	65	0.95	1,419	380
XHCPE500	500	37	65	65	1.03	1,746	430
XHCPE600	600	61	80	65	1.13	2,092	475
XHCPE750	750	61	80	65	1.23	2,579	535

**Per NEC Table 310.15 (B)(16). †The overcurrent protection for items marked with an obelisk (†) shall not exceed 15 amps for #14 AWG, 20 amps for #12 AWG and 30 amps for #10 AWG per NEC 310-17 footnote. NOTE: The data shown is approximate and subject to standard industry tolerances.*

SINGLE CONDUCTOR

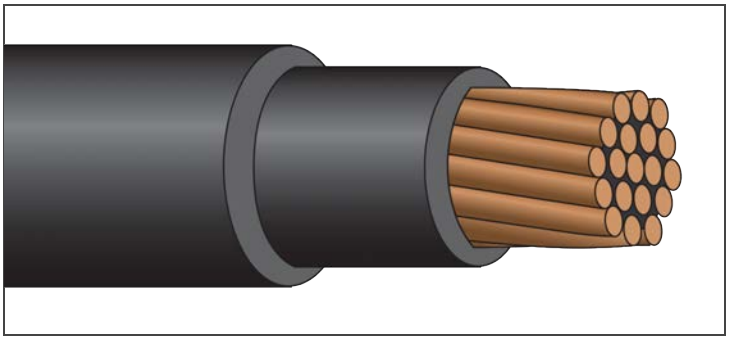

XHHW-2/ENVIROPLUS®

600/1,000 Volt Copper, Zero Halogen, Limited Smoke

Description:

Single copper conductor, stranded, insulated with heat and moisture resistant, crosslinked polyethylene *(type XHHW-2)*, with an overall flame and sunlight resistant, zero halogen, limited smoke, zero lead jacket.
Available with tinned conductors. Jacket available in colors.

Standards:

UL44
ICEA S-95-658/NEMA WC-70
Federal Spec. A-A-59544
Flame Rated: LS and CT Rated *(1/0 AWG and larger)*
Temperature Rated at 90°C Wet/Dry, Cold Temperature Rated at -40°C
Sunlight Resistant
Zero Halogen, Limited Smoke Jacket
RoHS Compliant

Part Number	Size (AWG or Kcmil)	Strand (no.)	Insulation Thickness (mils)	Jacket Thickness (mils)	Nominal Diameter Overall (in.)	Approx. Net Weight (lb./1000')	Ampacity* (30°C ambient) 90°C Wet/Dry
XHENV14	14	7	30	30	0.19	28	25†
XHENV12	12	7	30	30	0.21	38	30†
XHENV10	10	7	30	30	0.24	52	40†
XHENV8	8	7	45	30	0.30	80	55
XHENV6	6	7	45	30	0.33	116	75
XHENV4	4	7	45	30	0.38	171	95
XHENV3	3	7	45	30	0.40	208	115
XHENV2	2	7	45	30	0.43	255	130
XHENV1	1	19	55	45	0.52	335	145
XHENV1/0	1/0	19	55	45	0.59	419	170
XHENV2/0	2/0	19	55	45	0.64	514	195
XHENV3/0	3/0	19	55	45	0.69	632	225
XHENV4/0	4/0	19	55	45	0.75	780	260
XHENV250	250	37	65	65	0.84	937	290
XHENV300	300	37	65	65	0.89	1,104	320
XHENV350	350	37	65	65	0.94	1,270	350
XHENV400	400	37	65	65	0.98	1,435	380
XHENV500	500	37	65	65	1.06	1,763	430
XHENV600	600	61	80	65	1.17	2,110	475
XHENV750	750	61	80	65	1.27	2,598	535

**Per NEC Table 310.15 (B)(16). †The overcurrent protection for items marked with an obelisk (†) shall not exceed 15 amps for #14 AWG, 20 amps for #12 AWG and 30 amps for #10 AWG per NEC 310-17 footnote. NOTE: The data shown is approximate and subject to standard industry tolerances.*

servicewire.com

Phoenix, AZ
877-623-9473

Culloden, WV
800-624-3572

Houston, TX
800-231-9473

SINGLE CONDUCTOR

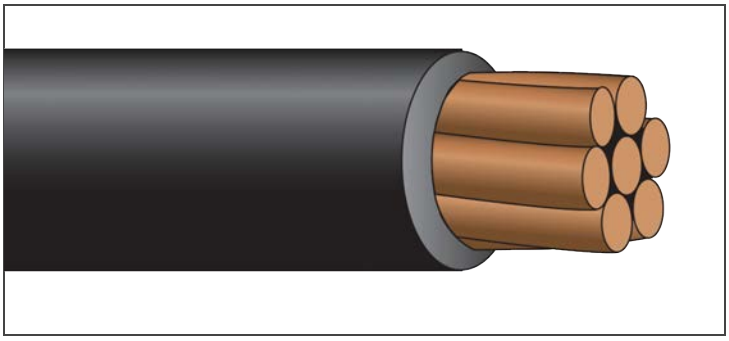

SERVICESOLAR® (PV)

USE-2 or RHH/RHW-2

600 Volt Copper

No Pulling Lubricant Required

ISO 9001:2008 RoHS COMPLIANT Made in the USA REACH

Description:

Single copper conductor, stranded and insulated with moisture and heat resistant crosslinked polyethylene. ServicePRO-X™ enhanced surface for ease of pulling *(6 AWG and larger)*. Rated 600V to meet the challenging requirements of transformerless inverters on photovoltaic *(solar)* panel installations.
Available in colors.

Application:

Suitable for use as interconnection wiring on solar panels in grounded or ungrounded systems as defined in applicable parts of the National Electrical Code (NEC) NFPA 70, such as article 690.31(A). Suitable for use in 105°C dry systems. Also suitable for use in low leakage circuits requiring a dielectric constant of 3.5 or less *(Hospital Grade)*.

Standards:

ASTM Standards: B-3 *(soft or annealed)*, B-8 *(concentric lay stranded)*
B787 *(combination strand)*
UL 44, UL 854 and UL 4703, C(UL) RPVU90 1kV/2kV
ICEA S-95-658/NEMA WC-70
Federal Spec. A-A-59544
Flame Rated: Vertical Wire/FV1, CT Use *(1/0 AWG and larger)*
Temperature Rated at 90°C Wet/Dry
Cold Temperature Rated at -40°C
Sunlight Resistant, Gasoline and Oil Resistant II
Direct Burial
RoHS Compliant

Part Number	Size (AWG or Kcmil)	Strand (no.)	Insulation Thickness (mils)	Nominal Diameter Overall (in.)	Approx. Net Weight (lb./1000')	Ampacity* 90°C Wet/Dry
PV14BK	14	7	60	0.19	25	35†
PV14BK-C	14	19	60	0.19	25	35†
PV12BK	12	7	60	0.21	34	40†
PV12BK-C	12	19	60	0.21	34	40†
PV10BK	10	7	60	0.24	48	55†
PV10BK-C	10	19	60	0.24	48	55†
PV8BK	8	7	75	0.29	75	80
PV8BK-C	8	19	75	0.29	75	80
PV6BK	6	7	75	0.33	109	105
PV4BK	4	7	75	0.38	162	140
PV3BK	3	7	75	0.40	198	165
PV2BK	2	7	75	0.43	243	190
PV1BK	1	19	95	0.51	316	220
PV1/0BK	1/0	19	95	0.55	389	260
PV2/0BK	2/0	19	95	0.59	481	300
PV3/0BK	3/0	19	95	0.64	595	350
PV4/0BK	4/0	19	95	0.70	738	405
PV250BK	250	37	110	0.79	875	455
PV300BK	300	37	110	0.85	1,037	500
PV350BK	350	37	110	0.90	1,198	570
PV400BK	400	37	110	0.94	1,358	615
PV500BK	500	37	110	1.02	1,676	700
PV600BK	600	61	125	1.14	2,021	780
PV750BK	750	61	125	1.24	2,497	885

**Based on ambient temperature of 30°C per NEC Table 310.15 (B)(17). †The overcurrent protection for items marked with an obelisk (†) shall not exceed 15 amps for #14 AWG, 20 amps for #12 AWG, and 30 amps for #10 AWG per NEC 310-17 footnote. NOTE: Photovoltaic module interconnection wire for use with or without a raceway in accordance with wiring systems Article 690 in the National Electrical Code (NEC), NFPA 70. NOTE: The data shown is approximate and subject to standard industry tolerances.*

SINGLE CONDUCTOR

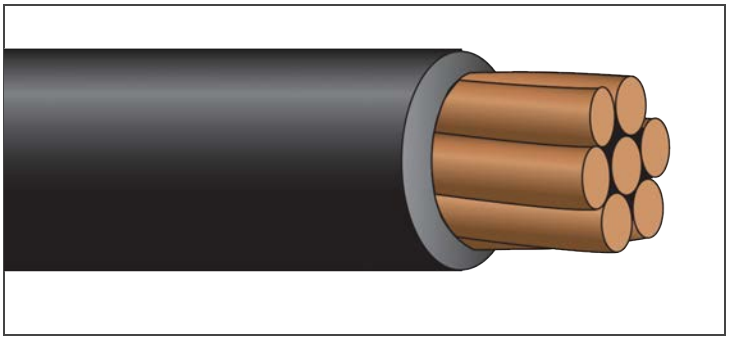

SERVICESOLAR® (PV)

VW-1, USE-2 or RHH/RHW-2

600 Volt Copper

No Pulling Lubricant Required

Description:

Single copper conductor, stranded and insulated with moisture and heat resistant crosslinked polyethylene. ServicePRO-X™ enhanced surface for ease of pulling *(6 AWG and larger)*. Rated 600V to meet the challenging requirements of transformerless inverters on photovoltaic *(solar)* panel installations.
Available in colors.

Application:

Suitable for use as interconnection wiring on solar panels in grounded or ungrounded systems as defined in applicable parts of the National Electrical Code (NEC) NFPA 70, such as article 690.31(A). Suitable for use in 105°C dry systems. Also suitable for use in low leakage circuits requiring a dielectric constant of 3.5 or less *(Hospital Grade)*.

Standards:

ASTM Standards: B-3 *(soft or annealed)*, B-8 *(concentric lay stranded)*, B787 *(combination strand)*
UL 44, UL 854 and UL 4703, C(UL) RPVU90 1kV/2kV
ICEA S-95-658/NEMA WC-70
Federal Spec. A-A-59544
Flame Rated: VW-1/FT1, CT Use *(1/0 AWG and larger)*
Temperature Rated at 90°C Wet/Dry
Cold Temperature Rated at -40°C
Sunlight Resistant, Gasoline and Oil Resistant II
Direct Burial
RoHS Compliant

Part Number	Size (AWG or Kcmil)	Strand (no.)	Insulation Thickness (mils)	Nominal Diameter Overall (in.)	Approx. Net Weight (lb./1000')	Ampacity* 90°C Wet/Dry
PV14VW	14	7	60	0.19	29	35†
PV14VW-C	14	19	60	0.19	29	35†
PV12VW	12	7	60	0.21	39	40†
PV12VW-C	12	19	60	0.21	39	40†
PV10VW	10	7	60	0.24	54	55†
PV10VW-C	10	19	60	0.24	54	55†
PV8VW	8	7	75	0.29	84	80
PV8VW-C	8	19	75	0.29	84	80
PV6VW	6	7	75	0.33	121	105
PV4VW	4	7	75	0.38	178	140
PV3VW	3	7	75	0.40	211	165
PV2VW	2	7	75	0.43	266	190
PV1VW	1	19	95	0.51	339	220
PV1/0VW	1/0	19	95	0.55	416	260
PV2/0VW	2/0	19	95	0.59	512	300
PV3/0VW	3/0	19	95	0.64	631	350
PV4/0VW	4/0	19	95	0.70	782	405
PV250VW	250	37	110	0.79	919	455
PV300VW	300	37	110	0.85	1,081	500
PV350VW	350	37	110	0.90	1,254	570
PV400VW	400	37	110	0.94	1,417	615
PV500VW	500	37	110	1.02	1,747	700
PV600VW	600	61	125	1.14	2,112	780
PV750VW	750	61	125	1.24	2,597	885

**Based on ambient temperature of 30°C per NEC Table 310.15 (B)(17). †The overcurrent protection for items marked with an obelisk (†) shall not exceed 15 amps for #14 AWG, 20 amps for #12 AWG, and 30 amps for #10 AWG per NEC 310-17 footnote. NOTE: The data shown is approximate and subject to standard industry tolerances. NOTE: Photovoltaic module interconnection wire for use with or without a raceway in accordance with wiring systems Article 690 in the National Electrical Code (NEC), NFPA 70.*

servicewire.com

Phoenix, AZ
877-623-9473

Culloden, WV
800-624-3572

Houston, TX
800-231-9473

SINGLE CONDUCTOR

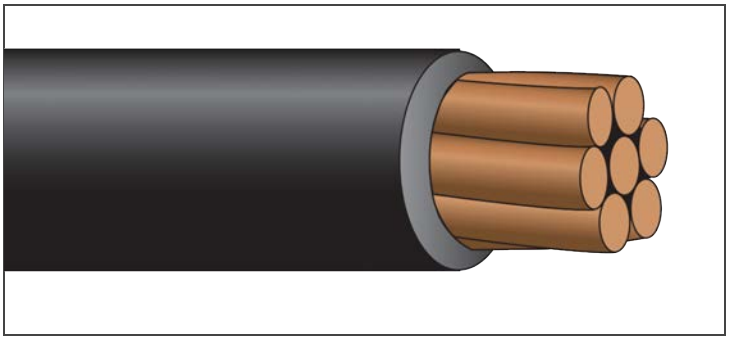

SERVICESOLAR® (PV)

USE-2 or RHH/RHW-2

1,000/2,000 Volt Copper

No Pulling Lubricant Required

ISO 9001:2008 RoHS COMPLIANT Made in the USA REACH

Description:

Single copper conductor, stranded and insulated with moisture and heat resistant crosslinked polyethylene. ServicePRO-X™ enhanced surface for ease of pulling *(6 AWG and larger)*. Rated 2kV to meet the challenging requirements of transformerless inverters on photovoltaic *(solar)* panel installations.
Available in colors.

Application:

Suitable for use as interconnection wiring on solar panels in grounded or ungrounded systems as defined in applicable parts of the National Electrical Code (NEC) NFPA 70, such as article 690.31(A). Suitable for use in 105°C dry systems. Also suitable for use in low leakage circuits requiring a dielectric constant of 3.5 or less *(Hospital Grade)*.

Standards:

ASTM Standards: B-3 *(soft or annealed)*, B-8 *(concentric lay stranded)*
B787 *(combination strand)*
UL 44, UL 854 and UL 4703, C(UL) RPVU90 1kV/2kV
ICEA S-95-658/NEMA WC-70
Federal Spec. A-A-59544
Flame Rated: Vertical Wire/FV1, CT Use *(1/0 AWG and larger)*
Temperature Rated at 90°C Wet/Dry
Cold Temperature Rated at -40°C
Sunlight Resistant, Gasoline and Oil Resistant II
Direct Burial
RoHS Compliant

Part Number	Size (AWG or Kcmil)	Strand (no.)	Insulation Thickness (mils)	Nominal Diameter Overall (in.)	Approx. Net Weight (lb./1000')	Ampacity* 90°C Wet/Dry
PV2K14BK	14	7	75	0.22	29	35†
PV2K14BK-C	14	19	75	0.22	29	35†
PV2K12BK	12	7	75	0.24	39	40†
PV2K12BK-C	12	19	75	0.24	39	40†
PV2K10BK	10	7	75	0.27	53	55†
PV2K10BK-C	10	19	75	0.27	53	55†
PV2K8BK	8	7	85	0.31	79	80
PV2K8BK-C	8	19	85	0.31	79	80
PV2K6BK	6	7	85	0.35	114	105
PV2K4BK	4	7	85	0.40	167	140
PV2K3BK	3	7	85	0.42	204	165
PV2K2BK	2	7	85	0.45	249	190
PV2K1BK	1	19	105	0.53	324	220
PV2K1/0BK	1/0	19	105	0.57	398	260
PV2K2/0BK	2/0	19	105	0.61	490	300
PV2K3/0BK	3/0	19	105	0.66	604	350
PV2K4/0BK	4/0	19	105	0.72	749	405
PV2K250BK	250	37	120	0.81	887	455
PV2K300BK	300	37	120	0.87	1,050	500
PV2K350BK	350	37	120	0.92	1,211	570
PV2K400BK	400	37	120	0.96	1,372	615
PV2K500BK	500	37	120	1.04	1,691	700
PV2K600BK	600	61	135	1.16	2,038	780
PV2K750BK	750	61	135	1.26	2,516	885

**Based on ambient temperature of 30°C per NEC Table 310.15 (B)(17). †The overcurrent protection for items marked with an obelisk (†) shall not exceed 15 amps for #14 AWG, 20 amps for #12 AWG, and 30 amps for #10 AWG per NEC 310-17 footnote. NOTE: Photovoltaic module interconnection wire for use with or without a raceway in accordance with wiring systems Article 690 in the National Electrical Code (NEC), NFPA 70. NOTE: The data shown is approximate and subject to standard industry tolerances.*

SINGLE CONDUCTOR

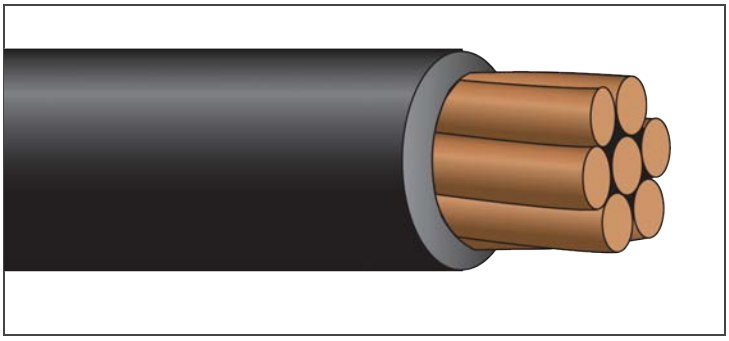

SERVICESOLAR® (PV)

VW-1, USE-2 or RHH/RHW-2

1,000/2,000 Volt Copper

No Pulling Lubricant Required

ISO 9001:2008 RoHS COMPLIANT Made in the USA REACH

Description:

Single copper conductor, stranded and insulated with moisture and heat resistant crosslinked polyethylene. ServicePRO-X™ enhanced surface for ease of pulling *(6 AWG and larger)*. Rated 2kV to meet the challenging requirements of transformerless inverters on photovoltaic *(solar)* panel installations.
Available in colors.

Application:

Suitable for use as interconnection wiring on solar panels in grounded or ungrounded systems as defined in applicable parts of the National Electrical Code (NEC) NFPA 70, such as article 690.31(A). Suitable for use in 105°C dry systems. Also suitable for use in low leakage circuits requiring a dielectric constant of 3.5 or less *(Hospital Grade)*.

Standards:

ASTM Standards: B-3 *(soft or annealed)*, B-8 *(concentric lay stranded)*, B787 *(combination strand)*
UL 44, UL 854 and UL 4703, C(UL) RPVU90 1kV/2kV
ICEA S-95-658/NEMA WC-70
Federal Spec. A-A-59544
Flame Rated: VW-1/FT1, CT Use *(1/0 AWG and larger)*
Temperature Rated at 90°C Wet/Dry
Cold Temperature Rated at -40°C
Sunlight Resistant, Gasoline and Oil Resistant II
Direct Burial
RoHS Compliant

Part Number	Size AWG or Kcmil	Strand (no.)	Insulation Thickness (mils)	Nominal Diameter Overall (in.)	Approx. Net Weight (lb./1000')	Ampacity* 90°C Wet/Dry
PV2K14VW	14	7	75	0.22	35	35†
PV2K14VW-C	14	19	75	0.22	35	35†
PV2K12VW	12	7	75	0.24	46	40†
PV2K12VW -C	12	19	75	0.24	46	40†
PV2K10VW	10	7	75	0.27	62	55†
PV2K10VW-C	10	19	75	0.27	62	55†
PV2K8VW	8	7	85	0.31	90	80
PV2K8VW-C	8	19	85	0.31	90	80
PV2K6VW	6	7	85	0.35	128	105
PV2K4VW	4	7	85	0.40	187	140
PV2K3VW	3	7	85	0.42	226	165
PV2K2VW	2	7	85	0.45	276	190
PV2K1VW	1	19	105	0.53	349	220
PV2K1/0VW	1/0	19	105	0.57	427	260
PV2K2/0VW	2/0	19	105	0.61	525	300
PV2K3/0VW	3/0	19	105	0.66	646	350
PV2K4/0VW	4/0	19	105	0.72	798	405
PV2K250VW	250	37	120	0.81	935	455
PV2K300VW	300	37	120	0.87	1,105	500
PV2K350VW	350	37	120	0.92	1,273	570
PV2K400VW	400	37	120	0.96	1,439	615
PV2K500VW	500	37	120	1.04	1,769	700
PV2K600VW	600	61	135	1.16	2,118	780
PV2K750VW	750	61	135	1.26	2,609	885

**Based on ambient temperature of 30°C per NEC Table 310.15 (B)(17). †The overcurrent protection for items marked with an obelisk (†) shall not exceed 15 amps for #14 AWG, 20 amps for #12 AWG, and 30 amps for #10 AWG per NEC 310-17 footnote. NOTE: Photovoltaic module interconnection wire for use with or without a raceway in accordance with wiring systems Article 690 in the National Electrical Code (NEC), NFPA 70. NOTE: The data shown is approximate and subject to standard industry tolerances.*

SINGLE CONDUCTOR

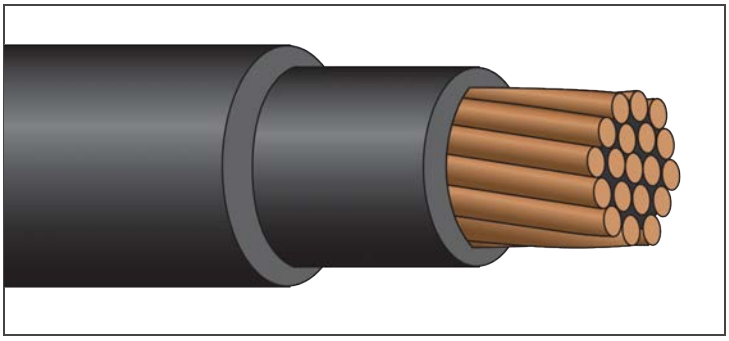

SERVICESOLAR® (PV)

USE-2 or RHH/RHW-2/EnviroPlus®

600 Volt Copper, Zero Halogen, Limited Smoke
(for use with Solar Panels)

Description:

Single conductor insulated with heat and moisture resistant, crosslinked polyethylene insulation *(type RHW-2)*, with an overall flame and sunlight resistant, zero halogen, limited smoke, zero lead jacket.
Available with tinned conductors.

Application:

Suitable for use as interconnection wiring on solar panels in grounded or ungrounded systems as defined in applicable parts of the National Electrical Code (NEC) NFPA 70, such as article 690.31(A).

Standards:

UL 4703 and UL854 *(#16 AWG per UL 66),* C(UL) RPV90 600V
ICEA S-95-658/NEMA WC-70
Flame Rated: VW-1/FT1, CT Use *(1/0 AWG and larger)*
Sunlight, Water, Crush and Abrasion Resistant
Temperature Rated at 90°C Wet/Dry
Cold Temperature Rated at -40°C
Direct Burial
Zero Halogen, Limited Smoke Jacket
RoHS Compliant

Part Number	Size (AWG or Kcmil)	Strand (no.)	Insulation Thickness (mils)	Jacket Thickness (mils)	Nominal Diameter Overall (in.)	Approx. Net Weight (lb./1000')	Ampacity* (30°C ambient) 90°C Wet/Dry
PVENV16	16	26	45	30	0.21	26	8
PVENV14	14	7	45	30	0.22	33	25
PVENV12	12	7	45	30	0.24	43	30†
PVENV10	10	7	45	30	0.27	58	40†
PVENV8	8	7	60	30	0.32	87	55
PVENV6	6	7	60	45	0.39	135	75
PVENV4	4	7	60	45	0.44	192	95
PVENV3	3	7	60	45	0.46	231	115
PVENV2	2	7	60	45	0.49	279	130
PVENV1	1	19	80	60	0.60	373	145
PVENV1/0	1/0	19	80	60	0.64	454	170
PVENV2/0	2/0	19	80	60	0.68	552	195
PVENV3/0	3/0	19	80	60	0.73	673	225
PVENV4/0	4/0	19	80	60	0.79	824	260
PVENV250	250	37	95	80	0.89	996	290
PVENV300	300	37	95	80	0.94	1,166	320
PVENV350	350	37	95	80	0.99	1,336	350
PVENV400	400	37	95	80	1.04	1,503	380
PVENV500	500	37	95	80	1.12	1,837	430
PVENV600	600	61	110	80	1.22	2,192	475
PVENV750	750	61	110	80	1.32	2,687	535

**Per NEC Table 310.15 (B)(16). †The overcurrent protection for items marked with an obelisk (†) shall not exceed 15 amps for #14 AWG, 20 amps for #12 AWG and 30 amps for #10 AWG per NEC 310-17 footnote. NOTE: The data shown is approximate and subject to standard industry tolerances.*

SINGLE CONDUCTOR

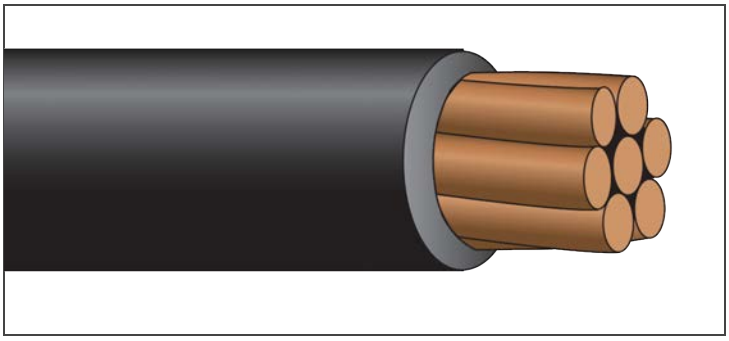

THW or TW75

600 Volt Copper

ISO 9001:2008 RoHS COMPLIANT Made in the USA REACH

Description:

Single copper conductor, stranded, insulated with moisture and flame retardant, sunlight resistant PVC. ***Available with tinned conductors. Available in colors.***

Application:

Suitable for use in conduit or other recognized raceways for services, feeders and branch circuit wiring. Applications include general purpose grounding for power and distribution circuits in residential, industrial and commercial buildings.

Standards:

ASTM Standards: B-3 *(soft or annealed)*, B-8 *(concentric lay stranded)*, B787 *(combination strand)*
UL 83, C(UL)US TW75: CSA/UL Listed *(#14 AWG - 500)*
ICEA S-95-658/NEMA WC-70
Federal Spec. A-A-59544
Flame Rated: VW-1/FT-1, CT Use *(1/0 AWG and larger)*
Temperature Rated at 75°C Wet/Dry
Sunlight Resistant Oil Resistant I
RoHS Compliant

Part Number	Size (AWG or Kcmil)	Strand (no.)	Insulation Thickness (mils)	Nominal Diameter Overall (in.)	Approx. Net Weight (lb./1000')	Ampacity* 75°C Wet/Dry
TH14SOLBK	14**	1	45	0.15	22	30†
TH12SOLBK	12**	1	45	0.17	31	35†
TH10SOLBK	10**	1	45	0.19	44	50†
TH8SOLBK	8	1	45	0.22	65	70
TH14BK	14	7	30	0.13	19	30†
TH12BK	12	7	30	0.15	28	35†
TH10BK	10	7	30	0.18	41	50†
TH8BK	8	7	45	0.23	68	70
TH6BK	6	7	60	0.30	111	95
TH4BK	4	7	60	0.35	166	125
TH3BK	3	7	60	0.37	204	145
TH2BK	2	7	60	0.40	251	170
TH1BK	1	19	80	0.48	324	195
TH1/0BK	1/0	19	80	0.52	402	230
TH2/0BK	2/0	19	80	0.56	493	265
TH3/0BK	3/0	19	80	0.61	610	310
TH4/0BK	4/0	19	80	0.67	758	360
TH250BK	250	37	95	0.76	896	405
TH300BK	300	37	95	0.82	1,062	445
TH350BK	350	37	95	0.87	1,226	505
TH400BK	400	37	95	0.91	1,389	545
TH500BK	500	37	95	0.99	1,713	620
TH600BK	600	61	110	1.11	2,067	690
TH750BK	750	61	110	1.21	2,548	785
TH1000BK	1,000	61	110	1.37	3,357	935

**Based on ambient temperature of 30°C per NEC Table 310.15 (B)(17). **Available with 30 mil Insulation. †The overcurrent protection for items marked with an obelisk (†) shall not exceed 15 amps for #14 AWG, 20 amps for #12 AWG, and 30 amps for #10 AWG per NEC 310-17 footnote. NOTE: The data shown is approximate and subject to standard industry tolerances.*

servicewire.com

Phoenix, AZ
877-623-9473

Culloden, WV
800-624-3572

Houston, TX
800-231-9473

SINGLE CONDUCTOR

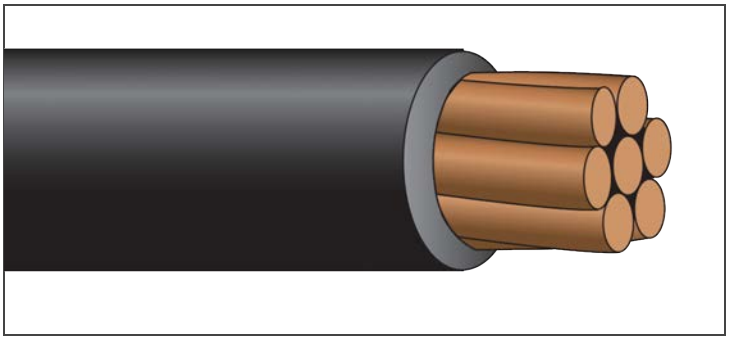

THW-2

600 Volt Copper

Description:

Single copper conductor, stranded, insulated with moisture and flame retardant, sunlight resistant PVC. ***Available in colors.***

Application:

Suitable for use in conduit or other recognized raceways for services, feeders and branch circuit wiring. Applications include general purpose grounding for power and distribution circuits in residential, industrial and commercial buildings.

Standards:

ASTM Standards: B-3 *(soft or annealed)*, B-8 *(concentric lay stranded)*, B787 *(combination strand)*
UL 83
ICEA S-95-658/NEMA WC-70
Federal Spec. A-A-59544
Flame Rated: VW-1/FT1, CT Use *(1/0 AWG and larger)*
Temperature Rated at 90°C Wet/Dry
Sunlight Resistant Oil Resistant II
RoHS Compliant

Part Number	Size (AWG or Kcmil)	Strand (no.)	Insulation Thickness (mils)	Nominal Diameter Overall (in.)	Approx. Net Weight (lb./1000')	Ampacity* 90°C Wet/Dry
THW14BK	14	7	30	0.13	19	35†
THW12BK	12	7	30	0.15	28	40†
THW10BK	10	7	30	0.18	41	55†
THW8BK	8	7	45	0.23	68	80
THW6BK	6	7	60	0.30	111	105
THW4BK	4	7	60	0.35	166	140
THW3BK	3	7	60	0.37	204	165
THW2BK	2	7	60	0.40	251	190
THW1BK	1	19	80	0.48	324	220
THW1/0BK	1/0	19	80	0.52	402	260
THW2/0BK	2/0	19	80	0.56	493	300
THW3/0BK	3/0	19	80	0.61	610	350
THW4/0BK	4/0	19	80	0.67	758	405
THW250BK	250	37	95	0.76	896	455
THW300BK	300	37	95	0.82	1,062	500
THW350BK	350	37	95	0.87	1,226	570
THW400BK	400	37	95	0.91	1,389	615
THW500BK	500	37	95	0.99	1,713	700
THW600BK	600	61	110	1.11	2,067	780
THW750BK	750	61	110	1.21	2,548	885
THW1000BK	1,000	61	110	1.37	3,357	1,055

**Based on ambient temperature of 30°C per NEC Table 310.15 (B)(17). †The overcurrent protection for items marked with an obelisk (†) shall not exceed 15 amps for #14 AWG, 20 amps for #12 AWG, and 30 amps for #10 AWG per NEC 310-17 footnote. NOTE: The data shown is approximate and subject to standard industry tolerances.*

SINGLE CONDUCTOR

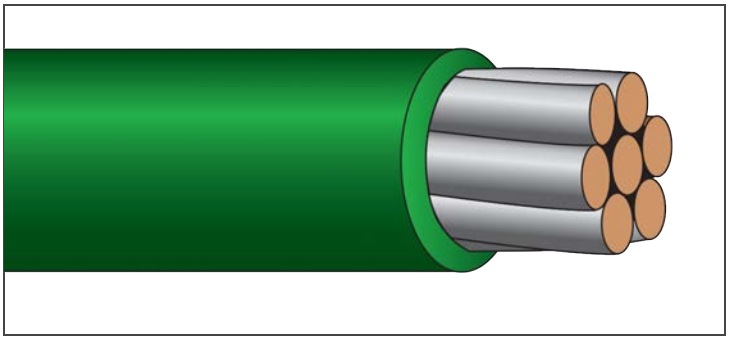

THW-2

90º Grounding Spec

600 Volt Tinned Copper

Description:

Single copper conductor, stranded, insulated with moisture and flame retardant, sunlight resistant green PVC.

Application:

Suitable for use in conduit or other recognized raceways for services, feeders and branch circuit wiring. Applications include general purpose grounding for power and distribution circuits in residential, industrial and commercial buildings.

Standards:

90° Grounding Spec.
ASTM Standards: B-3 *(soft or annealed),* B-8 *(concentric lay stranded)*
ICEA S-95-658/NEMA WC-70
Federal Spec. A-A-59544
Flame Rated: VW-1/FT1
Temperature Rated at 90°C Wet/Dry
Sunlight Resistant Oil Resistant II
RoHS Compliant

Part Number	Size (AWG or Kcmil)	Strand (no.)	Insulation Thickness (mils)	Nominal Diameter Overall (in.)	Approx. Net Weight (lb./1000')	Ampacity* 90°C Wet/Dry
THWT6GN	6	7	60	0.30	111	105
THWT2GN	2	7	60	0.40	251	190

**Based on ambient temperature of 30°C per NEC Table 310.15 (B)(17).*
NOTE: The data shown is approximate and subject to standard industry tolerances.

servicewire.com

Phoenix, AZ
877-623-9473

Culloden, WV
800-624-3572

Houston, TX
800-231-9473

SINGLE CONDUCTOR

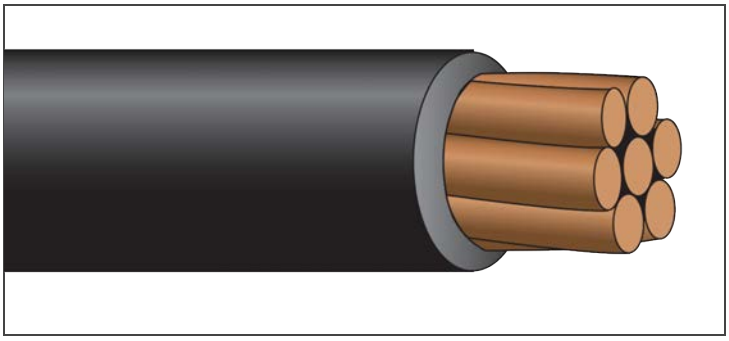

POLY LINE WIRE

HMW-PE/Copper

Solid/Stranded, Soft, Medium Hard, Hard Drawn

ISO 9001:2008 RoHS COMPLIANT Made in the USA REACH

Description:

Copper conductor, solid or stranded, soft *(annealed)*, medium hard or hard drawn, covered with black high molecular weight/linear low density polyethylene *(HMW-PE/LLD-PE)*.

Application:

Suitable for use in overhead distribution systems where protection from environmental elements is required.

Standards:

ASTM standards: B-1 *(hard drawn)*, B-2 *(medium hard drawn)*, B-3 *(soft or annealed)*, B-8 *(concentric lay stranded)*
Strand Class A, AA *(#1 AWG - 4/0 AWG)*
ANSI C8.35/ICEA S-70-547
Sunlight Resistant
RoHS Compliant

Part Number	Size (AWG or Kcmil)	Stranding	Covering Thickness (mils)	Nominal Diameter Overall (in.)	HARD DRAWN DC Resistance (OHMS/1000') @ 20°C	MEDIUM DRAWN DC Resistance (OHMS/1000') @ 20°C	SOFT (ANNEALED) DC Resistance (OHMS/1000') @ 20°C	Approx. Net Weight (lb./1000')	Ampacity* (amps)
PESOS6	6	1	30	0.22	0.411	0.409	0.395	87	130
PESOS4	4	1	30	0.26	0.258	0.257	0.249	135	163
PEST7S4	4	7	30	0.29	0.264	0.262	0.254	139	163
PESOS2	2	1	45	0.35	0.163	0.162	0.156	218	219
PEST7S2	2	7	45	0.38	0.166	0.165	0.159	224	219
PEST7S1	1	7	45	0.42	0.132	0.131	0.127	284	258
PEST7S1/0	1/0	7	60	0.49	0.104	0.104	0.100	358	297
PEST7S2/0	2/0	7	60	0.53	0.083	0.082	0.080	446	344
PEST7S3/0	3/0	7	60	0.58	0.066	0.065	0.063	557	401
PEST7S4/0	4/0	7	60	0.64	0.052	0.052	0.050	696	466
PEST37S250	250	37	60	0.70	0.044	0.044	0.042	819	519
PEST37S350	350	37	60	0.80	0.031	0.031	0.030	1,136	645
PEST37S500	500	37	80	0.97	0.022	0.022	0.021	1,626	812
PEST37S750	750	61	80	1.16	0.015	0.015	0.014	2,415	1,050
PEST37S1000	1000	61	95	1.34	0.011	0.011	0.011	3,234	1,253

**Per NEC Table 310.15 (B)(21). Based on conductor temperature of 80°C; ambient temperature of 40°C; 2 ft./sec. wind. NOTE: The data shown is approximate and subject to standard industry tolerances.*

SINGLE CONDUCTOR

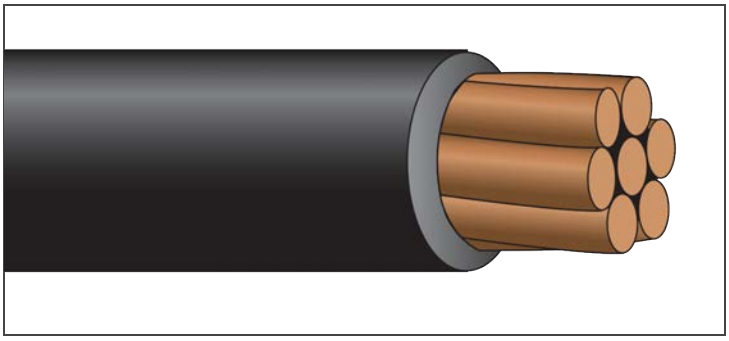

CATHODIC PROTECTION

600 Volt Copper

ISO 9001:2008 RoHS COMPLIANT Made in the USA REACH

Description:

Stranded copper conductor insulated with black high molecular weight/linear low density polyethylene *(HMW-PE/LLD-PE)*.

Application:

Suitable for direct burial for use in cathodic protection systems for pipelines, storage tanks, pilings, well casings, cables, water storage tanks and other buried or water-submerged metallic structures.

Standards:

ASTM standards: B-3 *(soft or annealed),*
B-8 *(concentric lay stranded),* D-1248
ICEA S-70-547/NEMA WC-5
Temperature Rated at 75°C Wet/Dry
Sunlight, Crush, Abrasion, Chemical, Oil and Moisture Resistant
Direct Burial
RoHS Compliant

Part Number	Size (AWG or Kcmil)	Stranding	Covering Thickness (mils)	Nominal Diameter Overall (in.)	DC Resistance (OHMS/1000') @ 20°C	Approx. Net Weight (lb./1000')
CATH8	8	7	110	0.37	0.652	87
CATH6	6	7	110	0.40	0.397	122
CATH4	4	7	110	0.45	0.254	175
CATH2	2	7	110	0.51	0.159	260
CATH1	1	19	110	0.58	0.127	330
CATH1/0	1/0	19	110	0.62	0.100	400
CATH2/0	2/0	19	110	0.66	0.080	495
CATH4/0	4/0	19	110	0.77	0.050	750
CATH250	250	37	140	0.86	0.042	900
CATH350	350	37	140	0.96	0.030	1,229

NOTE: The data shown is approximate and subject to standard industry tolerances.

SINGLE CONDUCTOR

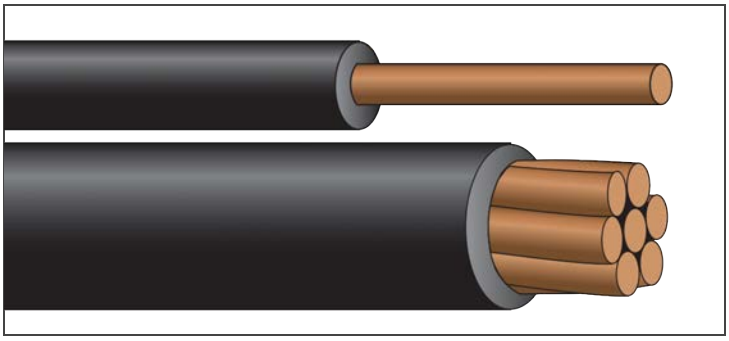

TRANSFORMER RISER

ISO 9001:2008 RoHS COMPLIANT Made in the USA REACH

Description:

Solid or stranded copper conductor, covered with black high molecular weight/linear low density polyethylene *(HMW-PE/LLD-PE)*.

Application:

Suitable for use in uninsulated transformer wire applications. Intended to eliminate faults due to atmospheric conditions, vibrations and faulting caused by objects crossing the leads. Suitable for riser applications at high voltages.

Standards:

ASTM standards: B-3 *(soft or annealed)*,
B-8 *(concentric lay stranded)*, D-1248
ICEA S-70-547/NEMA WC-5
Sunlight Resistant, Crush, Abrasion, Chemical, Oil, and Moisture Resistant
Direct Burial
RoHS Compliant

Part Number	Size (AWG)	Stranding	Covering Thickness (mils)	Nominal Diameter Overall (in.)	DC Resistance (OHMS/1000') @ 20°C	Approx. Net Weight (lb./1000')
RISER8	8	1	110	0.35	0.6532	83
RISER8-7	8	7	110	0.37	0.6532	87
RISER6	6	1	110	0.38	0.4110	118
RISER6-7	6	7	110	0.40	0.4109	122
RISER4	4	1	110	0.42	0.2590	171
RISER4-7	4	7	110	0.45	0.2584	177
RISER2	2	1	110	0.48	0.1627	253
RISER2-7	2	7	110	0.51	0.1625	261

NOTE: The data shown is approximate and subject to standard industry tolerances.

TWISTED CABLE

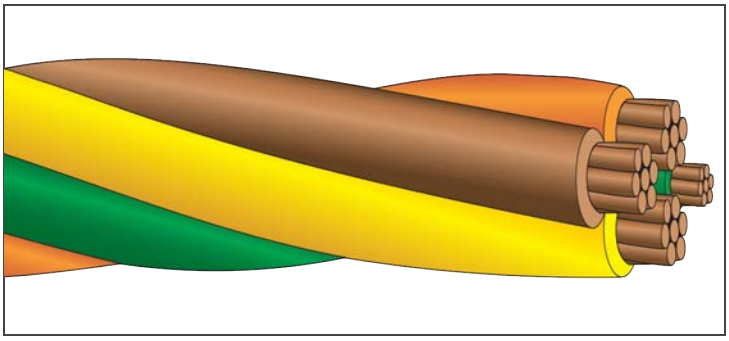

SERVICEPLEX®

XHHW-2

600/1,000 Volt Copper

Description:

Multiple single copper conductors, stranded, insulated with moisture, heat and flame resistant, chemically crosslinked polyethylene *(type XHHW-2)*, and twisted together to effectively function as a single cable. ServicePRO-X™ No Pulling Lubricant Required *(single conductors 6 AWG and larger)*. ***Available in colors.***

Application:

Suitable for general purpose wiring, for power distribution and branch circuit wiring where a cable having superior flame retardance is required. Suitable for use in 105°C dry systems. Also suitable for use in low leakage circuits requiring a dielectric constant of 3.5 or less *(Hospital Grade)*.

Standards:

ASTM Standards: B-3 *(soft and annealed)*, B-8 (concentric lay stranded), B-787 *(combination strand)*
UL 44
ICEA S-95-658/NEMA WC-70
Federal Spec. A-A-59544
Flame Rated: CT Use *(1/0 AWG and larger)*
Temperature Rated at 90°C Wet/Dry
Cold Temperature Rated at -40°C
Sunlight Resistant, Gasoline and Oil Resistant II
RoHS Compliant

Part Number	Size (AWG or Kcmil)	Strand (no.)	Insulation Thickness (mils)	Approx. Diameter Overall (in.)	Approx. Net Weight (lb./1000')
SPLEX14/3	14	7	30	0.29	54
SPLEX12/3	12	7	30	0.33	81
SPLEX10/3	10	7	30	0.38	119
SPLEX8/3	8	7	45	0.50	195
SPLEX6/3	6	7	45	0.58	297
SPLEX4/3	4	7	45	0.69	456
SPLEX3/3	3	7	45	0.74	565
SPLEX2/3	2	7	45	0.81	703
SPLEX1/3	1	19	55	0.92	890
SPLEX1/03	1/0	19	55	1.01	1,117
SPLEX2/03	2/0	19	55	1.10	1,394
SPLEX3/03	3/0	19	55	1.21	1,740
SPLEX4/03	4/0	19	55	1.33	2,176
SPLEX250/3	250	37	65	1.45	2,545
SPLEX350/3	350	37	65	1.66	3,522
SPLEX500/3	500	37	65	1.93	4,978
SPLEX600/3	600	61	80	2.16	5,998
SPLEX750/3	750	61	80	2.37	7,449

Part Number	Size (AWG or Kcmil)	Strand (no.)	Insulation Thickness (mils)	Approx. Diameter Overall (in.)	Approx. Net Weight (lb./1000')
SPLEX14/4	14	7	30	0.32	72
SPLEX12/4	12	7	30	0.37	107
SPLEX10/4	10	7	30	0.42	159
SPLEX8/4	8	7	45	0.56	260
SPLEX6/4	6	7	45	0.65	395
SPLEX4/4	4	7	45	0.77	607
SPLEX3/4	3	7	45	0.83	753
SPLEX2/4	2	7	45	0.90	937
SPLEX1/4	1	19	55	1.03	1,187
SPLEX1/04	1/0	19	55	1.13	1,490
SPLEX2/04	2/0	19	55	1.24	1,858
SPLEX3/04	3/0	19	55	1.35	2,319
SPLEX4/04	4/0	19	55	1.49	2,901
SPLEX250/4	250	37	65	1.62	3,393
SPLEX350/4	350	37	65	1.86	4,696
SPLEX500/4	500	37	65	2.16	6,638
SPLEX600/4	600	61	80	2.41	7,997
SPLEX750/4	750	61	80	2.65	9,932

NOTE: The data shown is approximate and subject to standard industry tolerances.

servicewire.com

Phoenix, AZ
877-623-9473

Culloden, WV
800-624-3572

Houston, TX
800-231-9473

TWISTED CABLE

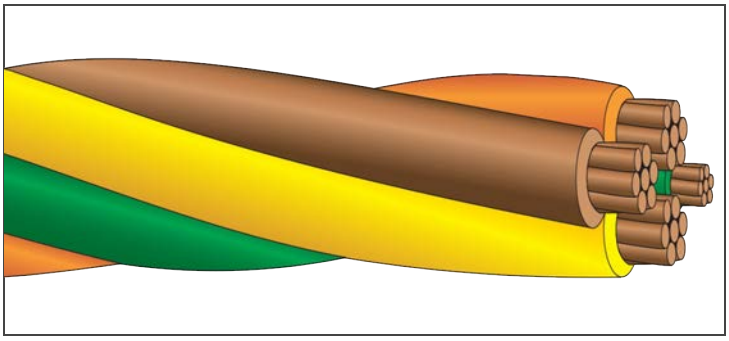

SERVICEPLEX®

USE-2, RHH/RHW-2

1,000 Volt Copper

ISO 9001: 2015 RoHS COMPLIANT Made in the USA RoHS COMPLIANT

Description:

Multiple single copper conductors, stranded, insulated with moisture and heat resistant, chemically crosslinked polyethylene *(type RHW-2)*, and twisted together to effectively function as a single cable. ServicePRO-X™ No Pulling Lubricant Required *(single conductors 6 AWG and larger)*. ***Available in colors.***

Application:

Suitable for general purpose wiring applications and may be installed in raceway, conduit, direct burial and aerial installations where a cable having superior flame retardance is required. Suitable for use in 105°C dry systems. Also suitable for use in low leakage circuits requiring a dielectric constant of 3.5 or less *(Hospital Grade)*.

Standards:

ASTM Standards: B-3 *(soft or annealed)*, B-8 *(concentric lay stranded)*, B-787 *(combination strand)*
UL 44 and UL 854
ICEA S-95-658/NEMA WC-70
Federal Spec. A-A-59544
Flame Rated: CT Use *(1/0 AWG and larger)*
Temperature Rated at 90°C Wet/Dry
Cold Temperature Rated at -40°C
Sunlight Resistant, Gasoline and Oil Resistant II
Direct Burial
RoHS Compliant

Part Number	Size (AWG or Kcmil)	Strand (no.)	Insulation Thickness (mils)	Approx. Diameter Overall (in.)	Approx. Net Weight (lb./1000')
SPLEX14/3U	14	7	45	0.35	64
SPLEX12/3U	12	7	45	0.39	92
SPLEX10/3U	10	7	45	0.44	131
SPLEX8/3U	8	7	60	0.57	211
SPLEX6/3U	6	7	60	0.65	315
SPLEX4/3U	4	7	60	0.75	477
SPLEX3/3U	3	7	60	0.81	587
SPLEX2/3U	2	7	60	0.87	728
SPLEX1/3U	1	19	80	1.03	938
SPLEX1/03U	1/0	19	80	1.11	1,173
SPLEX2/03U	2/0	19	80	1.21	1,454
SPLEX3/03U	3/0	19	80	1.31	1,806
SPLEX4/03U	4/0	19	80	1.44	2,248
SPLEX250/3U	250	37	95	1.58	2,640
SPLEX350/3U	350	37	95	1.79	3,630
SPLEX500/3U	500	37	95	2.06	5,103
SPLEX600/3U	600	61	110	2.28	6,137
SPLEX750/3U	750	61	110	2.50	7,601

Part Number	Size (AWG or Kcmil)	Strand (no.)	Insulation Thickness (mils)	Approx. Diameter Overall (in.)	Approx. Net Weight (lb./1000')
SPLEX14/4U	14	7	45	0.39	85
SPLEX12/4U	12	7	45	0.44	122
SPLEX10/4U	10	7	45	0.49	175
SPLEX8/4U	8	7	60	0.64	281
SPLEX6/4U	6	7	60	0.73	419
SPLEX4/4U	4	7	60	0.85	636
SPLEX3/4U	3	7	60	0.90	783
SPLEX2/4U	2	7	60	0.98	970
SPLEX1/4U	1	19	80	1.15	1,250
SPLEX1/04U	1/0	19	80	1.25	1,564
SPLEX2/04U	2/0	19	80	1.36	1,939
SPLEX3/04U	3/0	19	80	1.47	2,407
SPLEX4/04U	4/0	19	80	1.62	2,997
SPLEX250/4U	250	37	95	1.77	3,520
SPLEX350/4U	350	37	95	2.01	4,840
SPLEX500/4U	500	37	95	2.31	6,804
SPLEX600/4U	600	61	110	2.56	8,182
SPLEX750/4U	750	61	110	2.80	10,135

NOTE: The data shown is approximate and subject to standard industry tolerances.

TWISTED CABLE

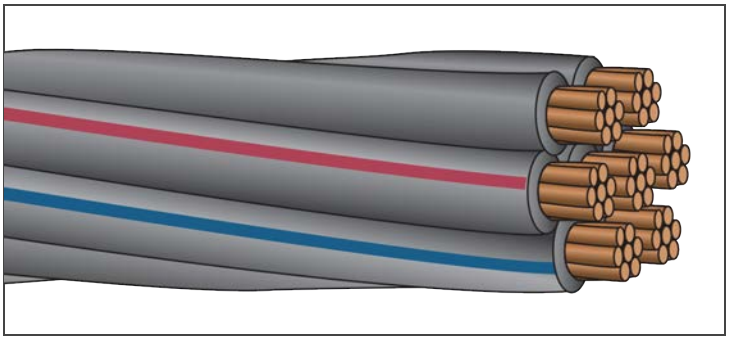

400 Hz

XHHW-2 or RW90

600/1,000 Volt Copper

Description:

Conductors are soft drawn copper, stranded and insulated with crosslinked polyethylene *(type XHHW-2 or RW90)*. Rated for 600V. Conductors are twisted in a six-around-one construction and phase identified per customer specifications.

Application:

Suitable for use as a power source for mainframe computers, TV and radio station output power supply, aircraft ground power supplies at airport terminals, plus many other applications. Lowers overall impedance of circuit, using multiple smaller conductors, which minimize voltage drop, a critical factor for 400 Hz computer power.

Standards:

ASTM Standards: B-3 *(soft or annealed)*, B-8 *(concentric lay stranded)*
B-787 *(combination unilay)*
UL 44 ICEA S-95-658/NEMA WC-70
Cold Temperature Rated at -40°C
Sunlight Resistant
RoHS Compliant

Part Number	Size (AWG or Kcmil)	Strand (no.)	Insulation Thickness (mils)	Approx. Diameter Overall (in.)	Approx. Net Weight (lb./1000')
HZ4/7K2NS	4	7	45	0.96	1,062
HZ2/7K2NS	2	7	45	1.12	1,640
HZ1/7K2NS	1	19	55	1.28	2,077
HZ1/07K2NS	1/0	19	55	1.40	2,607
HZ2/07K2NS	2/0	19	55	1.54	3,251
HZ3/07K2NS	3/0	19	55	1.68	4,059
HZ4/07K2NS	4/0	19	55	1.86	5,076
HZ250/7K2NS	250	37	65	2.02	5,938
HZ350/7K2NS	350	37	65	2.31	8,218
HZ500/7K2NS	500	37	65	2.69	11,616

NOTE: The data shown is approximate and subject to standard industry tolerances.

servicewire.com

Phoenix, AZ
877-623-9473

Culloden, WV
800-624-3572

Houston, TX
800-231-9473

TWISTED CABLE

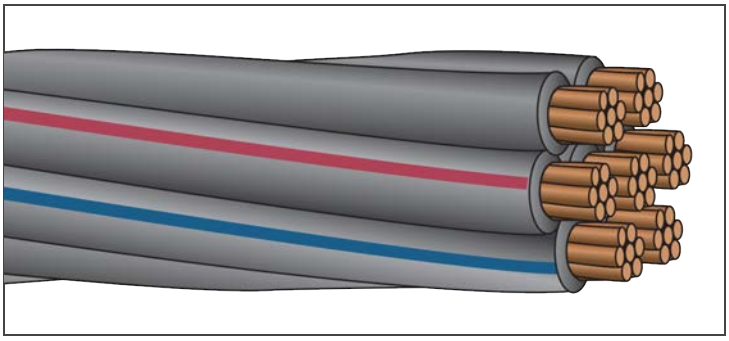

400 Hz

USE-2, RHH/RHW-2 or RW90

1,000 Volt Copper

Description:

Conductors are soft drawn copper, stranded and insulated with crosslinked polyethylene *(type USE-2 or RW90)*. Rated for 1kV. Conductors are twisted in a six-around-one construction and phase identified per customer specifications.

Application:

Suitable for use as a power source for mainframe computers, TV and radio station output power supply, aircraft ground power supplies at airport terminals, plus many other applications. Lowers overall impedance of circuit, using multiple smaller conductors, which minimize voltage drop, a critical factor for 400 Hz computer power.

Standards:

ASTM Standards: B-3 *(soft or annealed)*, B-8 *(concentric lay stranded)*
B-787 *(combination unilay)*
UL 44/854
ICEA S-95-658/NEMA WC-70
Cold Temperature Rated at -40°C
Sunlight Resistant
RoHS Compliant

Part Number	Size (AWG or Kcmil)	Strand (no.)	Insulation Thickness (mils)	Approx. Diameter Overall (in.)	Approx. Net Weight (lb./1000')
HZ1K4/7K2NS	4	7	60	1.05	1,112
HZ1K2/7K2NS	2	7	60	1.21	1,697
HZ1K1/7K2NS	1	19	80	1.43	2,188
HZ1K1/07K2NS	1/0	19	80	1.55	2,736
HZ1K2/07K2NS	2/0	19	80	1.69	3,392
HZ1K3/07K2NS	3/0	19	80	1.83	4,212
HZ1K4/07K2NS	4/0	19	80	2.01	5,245
HZ1K250/7K2NS	250	37	95	2.20	6,160
HZ1K350/7K2NS	350	37	95	2.49	8,470
HZ1K500/7K2NS	500	37	95	2.87	11,907

Ampacity is derated due to the fact that this is a multi-conductor assembly. NOTE: The data shown is approximate and subject to standard industry tolerances.

servicewire.com

Phoenix, AZ
877-623-9473

Culloden, WV
800-624-3572

Houston, TX
800-231-9473

TWISTED CABLE

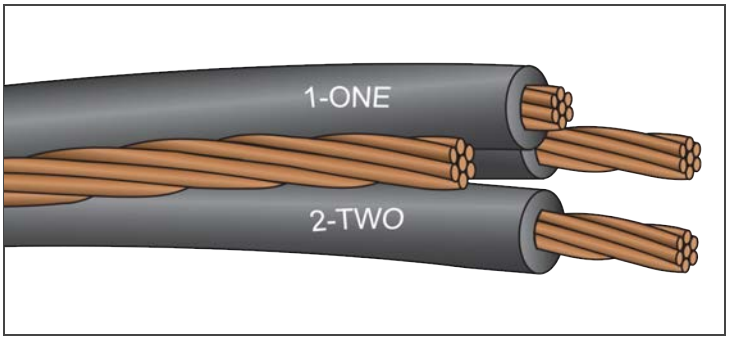

SERVICE DROP

XHHW-2 or RW90

600/1,000 Volt Copper

ISO 9001: 2015 RoHS COMPLIANT Made in the USA REACH

Description:

Conductors are stranded, bare soft drawn copper, insulated with heat, moisture and sunlight resistant crosslinked polyethylene *(type XHHW-2 or RW90)*. The neutral is solid or stranded bare, hard drawn copper.

Standards:

ASTM Standards: B-1 *(hard drawn)*, B-3 *(soft drawn or annealed)*, B-8 *(concentric-lay strand)*, B-787 *(combination unilay)*
UL 44
ICEA S-95-658/NEMA WC-70
Temperature Rated at 90°C Wet/Dry
Cold Temperature Rated at -40°C
RoHS Compliant

Part Number	Code Name	Insulated Conductors Size (AWG or Kcmil)	Insulated Conductors Strand (no.)	Insulated Conductors Insulation Thickness (mils)	Neutral - Messenger Size HARD DRAWN (AWG)	Neutral - Messenger Strand (no.)	Approx. Net Weight (lb./1000')	Ampacity* (40°C ambient)
TRI8CUSOL	Bodoni	8	7	45	8	1	180	66
TRI8CU	Garamond	8	7	45	8	7	182	66
TRI6CUSOL	Futura	6	7	45	6	1	276	89
TRI6CU	Gothic	6	7	45	6	7	281	89
TRI4CUSOL	Ionic	4	7	45	4	1	427	117
TRI4CU	Caslon	4	7	45	4	7	435	117
TRI2CU	Century	2	7	45	2	7	678	158
TRI1/0CU	Corinthian	1/0	19	55	1/0	7	1,077	214
TRI2/0CU	Doric	2/0	19	55	2/0	7	1,348	247
TRI3/0CU	Tuscan	3/0	19	55	3/0	7	1,688	287
TRI4/0CU	Composite	4/0	19	55	4/0	7	2,130	335
TRI250CU	Roman	250	37	65	250	37	2,484	374
TRI350CU	Helvetica	350	37	65	350	37	3,451	464
TRI500CU	Deville	500	37	65	500	37	4,894	580
QUAD8CU	Huntington	8	7	45	8	7	247	66
QUAD6CUSOL	Atlanta	6	7	45	6	1	373	89
QUAD6CU	Tallahassee	6	7	45	6	7	379	89
QUAD4CUSOL	Baton Rouge	4	7	45	4	1	576	117
QUAD4CU	Richmond	4	7	45	4	7	587	117
QUAD2CUSOL	Jackson	2	7	45	2	1	896	158
QUAD2CU	Seattle	2	7	45	2	7	912	158
QUAD1/0CU	Nashville	1/0	19	55	1/0	7	1,450	214
QUAD2/0CU	Lincoln	2/0	19	55	2/0	7	1,813	247
QUAD3/0CU	Raleigh	3/0	19	55	3/0	7	2,268	287
QUAD4/0CU	Denver	4/0	19	55	4/0	7	2,855	335
QUAD250CU	Pittsburgh	250	37	65	250	37	3,333	374
QUAD350CU	Houston	350	37	65	350	37	4,624	464
QUAD500CU	Culloden	500	37	65	500	37	6,553	580

**Per NEC Table 310.15 (B)(20). Ampacity figures are based on conductor temperature of 90°C, ambient temperature of 40°C. NOTE: The data shown is approximate and subject to standard industry tolerances.*

servicewire.com

Phoenix, AZ
877-623-9473

Culloden, WV
800-624-3572

Houston, TX
800-231-9473

TWISTED CABLE

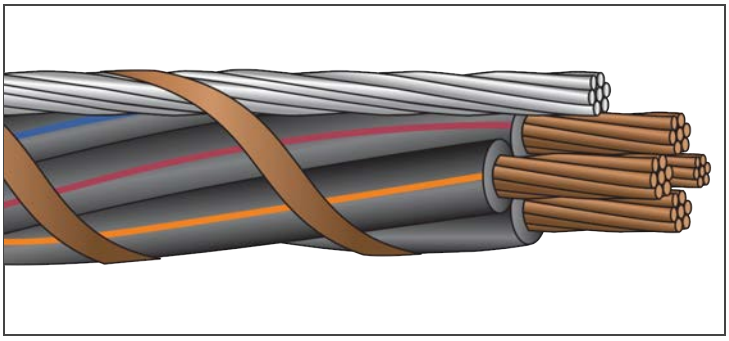

PREASSEMBLED AERIAL

XHHW-2 or RW90

600/1,000 Volt Copper

Description:

3 or 4 stranded, bare annealed copper conductors, insulated with heat and moisture resistant crosslinked polyethylene *(type XHHW- 2 or RW90)*. Conductors are cabled with a left hand lay and a messenger of 30% EHS copperweld laid parallel and bound with a flat bare copper binding strap. ***Available with galvanized or stainless steel messengers, PVC coated copper and stainless steel strap.***

Standards:

UL 44 *(single conductors)*
ICEA S-95-658/NEMA WC-70
Temperature Rated at 90°C Wet/Dry
Cold Temperature Rated at -40°C
Sunlight Resistant
RoHS Compliant

Part Number	Size (AWG or Kcmil)	Strand (no.)	Insulation Thickness (mils)	Messenger Size ** (in.)	Messenger Size ** Strand (no.)	Approx. Diameter Overall (in.)	Approx. Net Weight (lb./1000')	Ampacity* (40°C ambient)
AER1/4C8/3	8	7	45	1/4	7	0.74	428	66
AER1/4C6/3	6	7	45	1/4	7	0.83	532	89
AER1/4C4/3	4	7	45	1/4	7	0.93	695	117
AER1/4C2/3	2	7	45	1/4	7	1.05	947	158
AER1/4C1/3	1	19	55	1/4	7	1.16	1,139	185
AER1/4C1/03	1/0	19	55	1/4	7	1.25	1,369	214
AER5/16C2/03	2/0	19	55	5/16	7	1.41	1,728	247
AER5/16C3/03	3/0	19	55	5/16	7	1.51	2,078	287
AER3/8C4/03	4/0	19	55	3/8	7	1.72	2,643	335
AER3/8C250/3	250	37	65	3/8	7	1.83	3,017	374
AER1/2C350/3	350	37	65	1/2	7	2.15	4,199	464
AER9/16C500/3	500	37	65	9/16	7	2.48	5,804	580
AER9/16C750/3	750	61	80	9/16	7	2.91	8,291	747
AER1/4C8/4	8	7	45	1/4	7	0.81	495	66
AER1/4C6/4	6	7	45	1/4	7	0.90	633	89
AER1/4C4/4	4	7	45	1/4	7	1.02	850	117
AER1/4C2/4	2	7	45	1/4	7	1.15	1,185	158
AER1/4C1/4	1	19	55	1/4	7	1.27	1,439	185
AER5/16C1/04	1/0	19	55	5/16	7	1.43	1,825	214
AER5/16C2/04	2/0	19	55	5/16	7	1.54	2,197	247
AER3/8C3/04	3/0	19	55	3/8	7	1.74	2,788	287
AER3/8C4/04	4/0	19	55	3/8	7	1.88	3,374	335
AER1/2C250/4	250	37	65	1/2	7	2.11	4,069	374
AER1/2C350/4	350	37	65	1/2	7	2.35	5,381	464
AER9/16C500/4	500	37	65	9/16	7	2.71	7,472	580
AER9/16C750/4	750	61	80	9/16	7	3.20	10,785	747

**Per NEC Table 310.15 (B)(20). Four-conductor ampacity assumes three are hot and one is neutral. **Messenger size based on 150' span with sag of 2.5 ft. NOTE: The data shown is approximate and subject to standard industry tolerances.*

servicewire.com

Phoenix, AZ
877-623-9473

Culloden, WV
800-624-3572

Houston, TX
800-231-9473

TWISTED CABLE

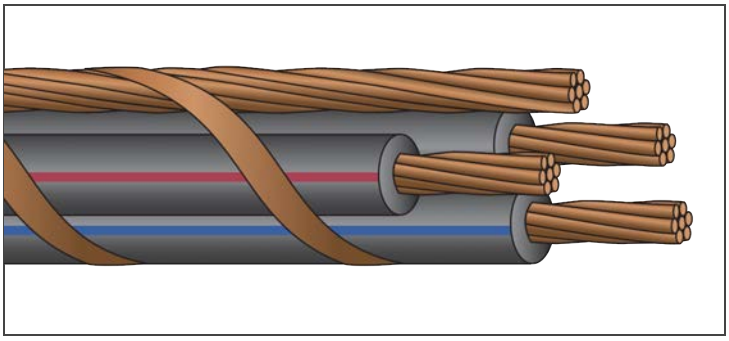

PREASSEMBLED AERIAL

MV-90, Jacketed EPR

2,400 Volt Copper, Nonshielded

Description:

Class B stranded copper, extruded conductor shield, insulated with heat and moisture resistant EPR. Conductors are cabled with a left hand lay and laid parallel to a 30% EHS copperweld messenger then bound with a flat copper binding strap. ***Available with galvanized or stainless steel messengers, PVC coated copper and stainless steel strap.***

Application:

2,400V nonshielded power cable *(type MV-90)* for conductor temperatures not exceeding 90°C.

Standards:

UL 1072 *(single conductors)*
ICEA S-96-659/NEMA WC-71
Sunlight Resistant
RoHS Compliant

Part Number	Size (AWG or Kcmil)	Strand (no.)	Insulation Thickness (mils)	Messenger Size ** (in.)	Messenger Size ** Strand (no.)	Approx. Diameter Overall (in.)	Approx. Net Weight (lb./1000')	Ampacity* (40°C ambient)
AR1/4C2.4K8/3E	8	7	125	1/4	7	1.50	774	66
AR1/4C2.4K6/3E	6	7	125	1/4	7	1.58	898	88
AR1/4C2.4K4/3E	4	7	125	1/4	7	1.69	1,100	115
AR1/4C2.4K2/3E	2	7	125	1/4	7	1.82	1,393	154
AR1/4C2.4K1/03E	1/0	19	125	1/4	7	1.97	1,856	205
AR5/16C2.4K2/03E	2/0	19	125	5/16	7	2.14	2,242	240
AR3/8C2.4K4/03E	4/0	19	125	3/8	7	2.57	3,490	320
AR3/8C2.4K250/3E	250	37	140	3/8	7	2.74	3,907	355
AR1/2C2.4K350/3E	350	37	140	1/2	7	3.06	5,178	440
AR9/16C2.4K500/3E	500	37	140	9/16	7	3.40	6,898	545
AR9/16C2.4K750/3E	750	61	155	9/16	7	3.91	9,786	685

**Per NEC Table 310.60 (C)(71). **Messenger size based on 150' span with sag of 2.5 ft. NOTE: The data shown is approximate and subject to standard industry tolerances.*

servicewire.com

Phoenix, AZ
877-623-9473

Culloden, WV
800-624-3572

Houston, TX
800-231-9473

TWISTED CABLE

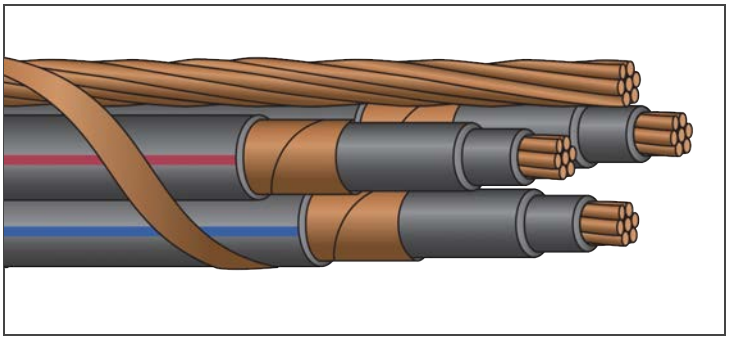

PREASSEMBLED AERIAL

MV-105, Jacketed EPR

5,000 Volt Copper, Shielded

Description:

Class B stranded copper, extruded semi-conductor shield, insulated with heat and moisture resistant EPR, copper shield *(stranded or tape)*, with conductor jacket *(PVC, CPE, etc.)*. Conductors are cabled with a left hand lay and laid parallel to a 30% EHS copperweld messenger then bound with a flat copper binding strap. ***Available with galvanized or stainless steel messengers, PVC coated copper or PVC coated stainless steel strap.***

Standards:

UL 1072 *(single conductors)*
ICEA S-93-639/NEMA WC-74
Sunlight Resistant
RoHS Compliant

Part Number	Size (AWG or Kcmil)	Strand (no.)	Insulation Thickness (mils)	Jacket Thickness (mils)	Messenger Size ** (in.)	Messenger Size** Strand (no.)	Approx. Diameter Overall (in.)	Approx. Net Weight (lb./1000')	Ampacity* (40°C ambient)
AR5/16C5KS6/3E	6	7	115	60	5/16	7	1.76	1,250	88
AR5/16C5KS4/3E	4	7	115	60	5/16	7	1.88	1,500	115
AR5/16C5KS2/3E	2	7	115	60	5/16	7	1.99	1,795	154
AR5/16C5KS1/03E	1/0	19	115	80	5/16	7	2.27	2,418	205
AR3/8C5KS2/03E	2/0	19	115	80	3/8	7	2.46	2,883	240
AR1/2C5KS4/03E	4/0	19	115	80	1/2	7	2.75	3,975	320
AR9/16C5KS250/3E	250	37	115	80	9/16	7	2.94	4,592	355
AR9/16C5KS350/3E	350	37	115	80	9/16	7	3.16	5,687	440
AR9/16C5KS500/3E	500	37	115	80	9/16	7	3.48	7,382	545
AR9/16C5KS750/3E	750	61	115	80	9/16	7	3.89	10,137	685

**Per NEC Table 310.60 (C)(71). **Messenger size based on 150' span with sag of 2.5 ft. NOTE: The data shown is approximate and subject to standard industry tolerances.*

TWISTED CABLE

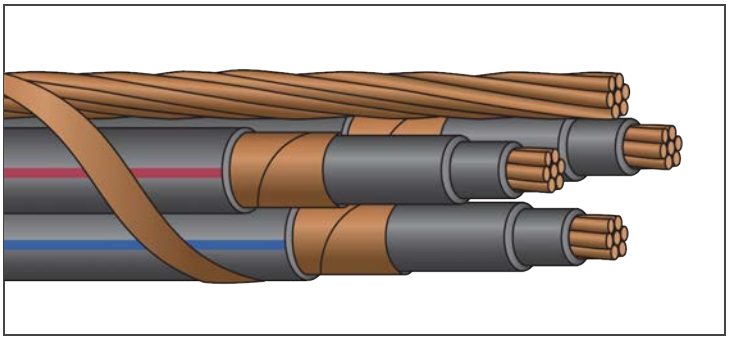

PREASSEMBLED AERIAL

MV-105, 133% Jacketed EPR

15,000 Volt Copper

Description:

Class B stranded copper, extruded semi-conductor shield, insulated with heat and moisture resistant EPR, 133% insulation level, with conductor jacket *(PVC, CPE, etc.)*. Conductors are cabled with a left hand lay and laid parallel to the 30% EHS copperweld messenger, bound with a rounded-edge flat PVC coated copper binding strap. ***Available with galvanized or stainless steel messengers, PVC coated copper or PVC coated stainless steel strap.***

Standards:

UL 1072 *(single conductors)*
ICEA S-93-639/NEMA WC-74
Sunlight Resistant
RoHS Compliant

Part Number	Size (AWG or Kcmil)	Strand (no.)	Insulation Thickness (mils)	Jacket Thickness (mils)	Messenger Size** (in.)	Messenger Size** Strand (no.)	Approx. Diameter Overall (in.)	Approx. Net Weight (lb./1000')	Ampacity* (40°C ambient)
AR3/8C15K2/3E	2	7	220	80	3/8	7	2.63	2,599	185
AR1/2C15K1/3E	1	19	220	80	1/2	7	2.82	3,029	210
AR1/2C15K1/03E	1/0	19	220	80	1/2	7	2.93	3,370	240
AR1/2C15K2/03E	2/0	19	220	80	1/2	7	3.03	3,756	275
AR9/16C15K4/03E	4/0	19	220	80	9/16	7	3.27	4,758	360
AR9/16C15K250/3E	250	37	220	80	9/16	7	3.44	5,346	400
AR9/16C15K350/3E	350	37	220	80	9/16	7	3.65	6,502	490
AR9/16C15K500/3E	500	37	220	80	9/16	7	3.93	8,211	600
AR9/16C15K750/3E	750	61	220	110	9/16	7	4.47	11,353	745

**Per NEC Table 310.60 (C)(71). **Messenger size based on 150' span with sag of 2.5 ft. NOTE: The data shown is approximate and subject to standard industry tolerances.*

servicewire.com

Phoenix, AZ
877-623-9473

Culloden, WV
800-624-3572

Houston, TX
800-231-9473

TRAY & POWER CABLE

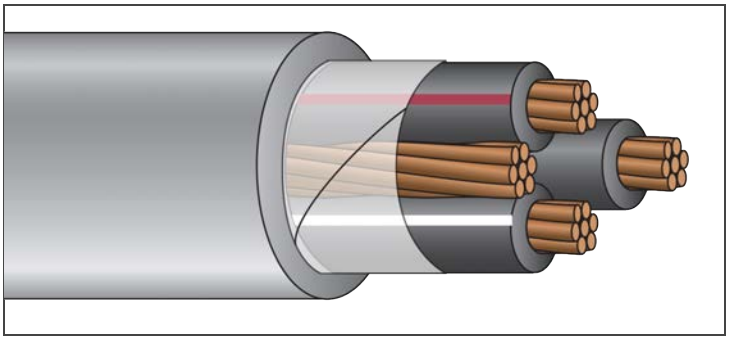

SE-R

XHHW-2/PVC, Service Entrance

600 Volt Copper

Description:

3 conductors, stranded, insulated with heat and moisture resistant crosslinked polyethylene *(type XHHW-2)* and phase identified. Cabled with bare copper ground conductor. Cable core covered with flame retardant binder tape and overall grey PVC jacket.

Standards:

UL 44 and UL 854
ICEA S-95-658/NEMA WC70
Temperature Rated at 90°C Wet/Dry
Sunlight Resistant
Color Code: K-1 Stripes
RoHS Compliant

Part Number	Size (AWG)	Strand (no.)	Insulation Thickness (mils)	Grounding Conductor (AWG)	PVC Jacket Thickness (mils)	Approx. Diameter Overall (in.)	Approx. Net Weight (lb./1000')	Ampacity* (30°C ambient) 90°C Wet/Dry
SER6/3G6	6	7	45	6	30	0.75	432	75
SER4/3G6	4	7	45	6	30	0.82	597	95
SER3/3G5	3	7	45	5	30	0.92	747	115
SER2/3G4	2	7	45	4	30	0.97	901	130
SER1/3G3	1	19	55	3	30	1.09	1,122	145
SER1/03G2	1/0	19	55	2	30	1.19	1,387	170
SER2/03G1	2/0	19	55	1	30	1.29	1,719	195
SER3/03G1/0	3/0	19	55	1/0	30	1.42	2,138	225
SER4/03G2/0	4/0	19	55	2/0	30	1.56	2,661	260

**Per NEC Table 310.15 (B)(16). NOTE: The data shown is approximate and subject to standard industry tolerances.*

servicewire.com

Phoenix, AZ
877-623-9473

Culloden, WV
800-624-3572

Houston, TX
800-231-9473

TRAY & POWER CABLE

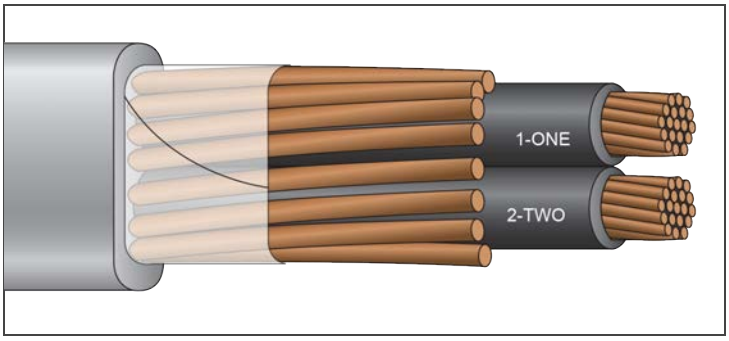

SE-U

XHHW-2/PVC, Service Entrance

600 Volt Copper

Description:

2 conductors, stranded, insulated with heat and moisture resistant crosslinked polyethylene *(type XHHW-2)* and phase identified. Cabled with bare copper ground conductor. Cable core covered with flame retardant binder tape and overall grey PVC jacket.

Standards:

UL 44 and UL 854
ICEA S-95-658/NEMA WC70
Temperature Rated at 90°C Wet/Dry
Sunlight Resistant
Color Code: Method 4
RoHS Compliant

Part Number	Size (AWG)	Strand (no.)	Insulation Thickness (mils)	Grounding Conductor (AWG)	Jacket Thickness (mils)	Diameter Overall (in.)	Approx. Net Weight (lb./1000')	Ampacity* (30°C ambient) 90°C Wet/Dry
SEU8/2G8	8	7	45	8	30	0.64	220	55
SEU6/2G8	6	7	45	8	30	0.71	291	75
SEU6/2G6	6	7	45	6	30	0.71	321	75
SEU4/2G6	4	7	45	6	30	0.81	431	95
SEU4/2G4	4	7	45	4	30	0.81	476	95
SEU3/2G4	3	7	45	4	30	0.86	550	115
SEU3/2G3	3	7	45	3	30	0.93	590	115
SEU2/2G4	2	7	45	4	30	0.92	645	130
SEU2/2G2	2	7	45	2	30	0.99	731	130
SEU1/2G1	1	19	55	1	30	1.11	906	145
SEU1/02G1/0	1/0	19	55	1/0	30	1.18	1,130	170
SEU2/02G2/0	2/0	19	55	2/0	30	1.27	1,409	195

**Per NEC Table 310.15 (B)(16). NOTE: The data shown is approximate and subject to standard industry tolerances.*

servicewire.com

Phoenix, AZ
877-623-9473

Culloden, WV
800-624-3572

Houston, TX
800-231-9473

TRAY & POWER CABLE

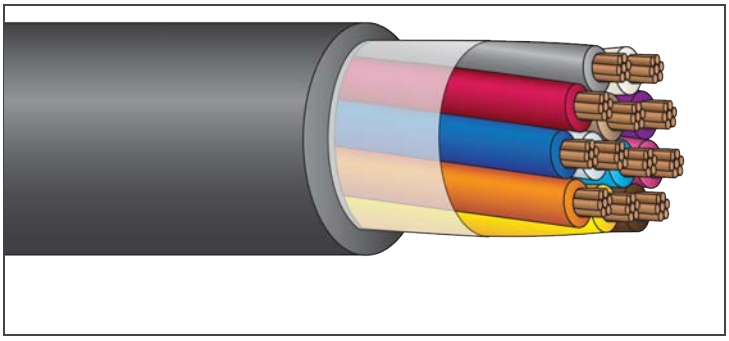

TRAY CABLE

XHHW-2 or RW90/PVC

600 Volt Copper

ISO 9001:2008 RoHS COMPLIANT Made in the USA REACH

Description:

Class B stranded, annealed copper conductors, insulated with heat and moisture resistant crosslinked polyethylene *(type XHHW-2 or RW90)* and phase identified. Cabled with fillers and binders *(when necessary)*. Cable core covered with overall black PVC jacket. ***Jacket available in colors.***

Application:

Suitable for use in hazardous locations: Class I - Div 2, Class II - Div 2

Standards:

UL 1277, CSA C22.2 #230/#239 TC/CIC
ICEA S-95-658/NEMA WC-70
Exposed Runs Rated *(TC-ER)*
IMSA 19-1
Flame Rated: IEEE 383 *(70,000 BTU)*, ICEA T-29-520 *(210,000 BTU) (#14 AWG and larger)*, IEEE 1202/CSA FT-4 *(#14 AWG and larger)*, Two-hour Firewall, VW-1 *(conductors) (#14 AWG and larger)*
Temperature Rated at 90°C Wet/Dry
Sunlight and Oil Resistant II Jacket
Direct Burial
Color Code: K-2 *(optional color codes available)*
RoHS Compliant

Part Number	Number of Conductors	Overall Jacket (mils)	Nominal Diameter (in.)	Approx. Net Weight (lb./1000')	Part Number	Number of Conductors	Overall Jacket (mils)	Nominal Diameter (in.)	Approx. Net Weight (lb./1000')
TCP16/2FL	2 (flat)	45	0.33 X 0.21	49	TCXH12/2FL	2 (flat)	45	0.39 X 0.24	83
TCP16/3	3	45	0.35	63	TCXH12/3	3	45	0.42	112
TCP16/4	4	45	0.38	77	TCXH12/4	4	45	0.46	142
TCP16/5	5	45	0.41	93	TCXH12/5	5	45	0.50	172
TCP16/7	7	45	0.45	120	TCXH12/7	7	60	0.58	245
TCP16/9	9	60	0.55	166	TCXH12/9	9	60	0.67	309
TCP16/12	12	60	0.64	215	TCXH12/12	12	60	0.77	406
TCP16/19	19	60	0.74	313	TCXH12/19	19	80	0.94	643
TCP16/25	25	60	0.82	428	TCXH12/25	25	80	1.04	820
TCP16/37	37	80	1.02	598	TCXH12/37	37	80	1.24	1,172
TCXH14/2FL	2 (flat)	45	0.36 X 0.22	63	TCXH10/2FL	2 (flat)	45	0.44 X 0.27	113
TCXH14/3	3	45	0.38	82	TCXH10/3	3	45	0.47	155
TCXH14/4	4	45	0.41	103	TCXH10/4	4	45	0.51	198
TCXH14/5	5	45	0.45	124	TCXH10/5	5	60	0.59	258
TCXH14/7	7	45	0.49	163	TCXH10/7	7	60	0.64	343
TCXH14/9	9	60	0.60	223	TCXH10/9	9	60	0.75	434
TCXH14/12	12	60	0.69	292	TCXH10/12	12	80	0.91	606
TCXH14/19	19	60	0.8	431	TCXH10/19	19	80	1.05	906
TCXH14/25	25	80	0.94	584	TCXH10/25	25	80	1.18	1,163
TCXH14/37	37	80	1.11	826	TCXH10/37	37	80	1.40	1,674

NOTE: The data shown is approximate and subject to standard industry tolerances. NOTE: #16 AWG per UL 66 Fixture Wire type FFH-2.

servicewire.com

Phoenix, AZ
877-623-9473

Culloden, WV
800-624-3572

Houston, TX
800-231-9473

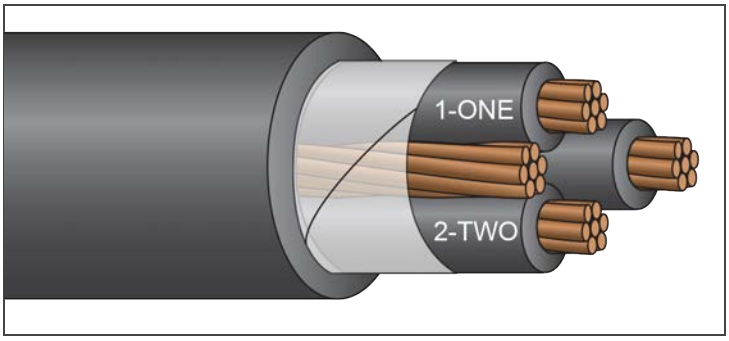

TRAY CABLE

XHHW-2 or RW90/PVC

600 Volt Copper

3 Conductor

Description:

3 conductors, stranded, insulated with heat and moisture resistant crosslinked polyethylene *(type XHHW-2 or RW90)* and phase identified. Cabled with fillers *(when necessary)* and bare copper ground conductor. Cable core covered with binder tape and overall black PVC jacket. ***Jacket available in colors.***

Application:

Suitable for use in hazardous locations: Class I - Div 2, Class II - Div 2
Suitable for submersible applications.

Standards:

UL 1277, CSA C22.2 #230 TC
ICEA S-95-658/NEMA WC-70
Exposed Runs Rated *(TC-ER) (#4 AWG and larger)*
(#6 AWG and smaller with green ground or no ground)
IMSA 19-1
Flame Rated: IEEE 383 *(70,000 BTU)*, ICEA T-29-520 *(210,000 BTU)*
(1/0 AWG and larger), IEEE 1202/CSA FT-4 *(1/0 AWG and larger)*,
Two-hour Firewall
Temperature Rated at 90°C Wet/Dry
Sunlight and Oil Resistant II Jacket
Direct Burial
Color Code: Method 4, K-2 *(#14 AWG-#8 AWG)*
(optional color codes available)
RoHS Compliant

Part Number	Size (AWG or Kcmil)	Strand (no.)	Insulation Thickness (mils)	Grounding Conductor (AWG)	PVC Jacket Thickness (mils)	Approx. Diameter Overall (in.)	Approx. Net Weight (lb./1000')	Ampacity* (30°C ambient) 90°C Wet/Dry
TCXH14/3G	14	7	30	14	45	0.38	95	25†
TCXH14/3GG	14	7	30	14	45	0.41	103	25†
TCXH12/3G	12	7	30	12	45	0.42	132	30†
TCXH12/3GG	12	7	30	12	45	0.46	142	30†
TCXH10/3G	10	7	30	10	45	0.47	187	40†
TCXH10/3GG	10	7	30	10	45	0.51	198	40†
TCXH8/3G	8	7	45	10	60	0.62	291	55
TCXH8/3GG	8	7	45	10	60	0.68	305	55
TCXH6/3G	6	7	45	8	60	0.72	450	75
TCXH6/3GG	6	7	45	8	60	0.79	481	75
TCXH4/3G	4	7	45	8	80	0.87	664	95
TCXH3/3G	3	7	45	6	80	0.92	814	115
TCXH2/3G	2	7	45	6	80	0.99	971	130
TCXH1/3G	1	19	55	6	80	1.10	1,191	145
TCXH1/03G	1/0	19	55	6	80	1.19	1,445	170
TCXH2/03G	2/0	19	55	6	80	1.28	1,752	195
TCXH3/03G	3/0	19	55	4	80	1.39	2,177	225
TCXH4/03G	4/0	19	55	4	80	1.51	2,657	260
TCXH250/3G	250	37	65	4	80	1.63	3,069	290
TCXH300/3G	300	37	65	3	110	1.80	3,733	320
TCXH350/3G	350	37	65	3	110	1.90	4,268	350
TCXH400/3G	400	37	65	3	110	2.00	4,798	380
TCXH500/3G	500	37	65	2	110	2.17	5,895	430
TCXH600/3G	600	61	80	2	110	2.40	7,032	475
TCXH750/3G	750	61	80	1	110	2.61	8,655	535
TCXH1000/3G	1000	61	80	1/0	140	3.13	11,615	615

**Per NEC Table 310.15 (B)(16). †The overcurrent protection for items marked with an obelisk (†) shall not exceed 15 amps for #14 AWG, 20 amps for #12 AWG and 30 amps for #10 AWG per NEC 310-16 footnote. NOTE: The data shown is approximate and subject to standard industry tolerances.*

TRAY & POWER CABLE

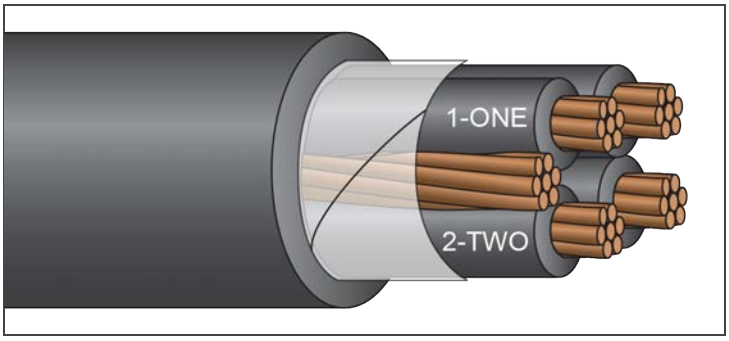

TRAY CABLE

XHHW-2 or RW90/PVC

600 Volt Copper

4 Conductor

ISO 9001: 2015 RoHS COMPLIANT Made in the USA REACH

Description:

4 conductors, stranded, insulated with heat and moisture resistant crosslinked polyethylene *(type XHHW-2 or RW90)*, phase identified and cabled with fillers *(when necessary)* and bare copper ground conductor. Cable core covered with binder tape, and overall black PVC jacket. ***Jacket available in colors.***

Application:

Suitable for use in hazardous locations: Class I - Div 2, Class II - Div 2

Standards:

UL 1277, CSA C22.2 #230 TC
ICEA S-95-658/NEMA WC-70
Exposed Runs Rated *(TC-ER) (#4 AWG and larger)*
(#6 AWG and smaller with green ground or no ground)
IMSA 19-1
Flame Rated: IEEE 383 *(70,000 BTU)*, ICEA T-29-520 *(210,000 BTU)*
(1/0 AWG and larger), IEEE 1202/CSA FT-4 *(1/0 AWG and larger)*,
Two-hour Firewall
Temperature Rated at 90°C Wet/Dry
Sunlight and Oil Resistant II Jacket
Direct Burial Color Code: Method 4, K-2 *(#14 AWG - #8 AWG)*
(optional color codes available)
RoHS Compliant

Part Number	Size (AWG or Kcmil)	Strand (no.)	Insulation Thickness (mils)	Grounding Conductor (AWG)	PVC Jacket Thickness (mils)	Approx. Diameter Overall (in.)	Approx. Net Weight (lb./1000')	Ampacity* (30°C ambient) 90°C Wet/Dry
TCXH14/4G	14	7	30	14	45	0.41	116	25†
TCXH14/4GG	14	7	30	14	45	0.45	124	25†
TCXH12/4G	12	7	30	12	45	0.46	162	30†
TCXH12/4GG	12	7	30	12	45	0.50	172	30†
TCXH10/4G	10	7	30	10	45	0.51	231	40†
TCXH10/4GG	10	7	30	10	60	0.59	258	40†
TCXH8/4G	8	7	45	10	60	0.68	363	55
TCXH8/4GG	8	7	45	10	60	0.74	377	55
TCXH6/4G	6	7	45	8	60	0.79	560	75
TCXH6/4GG	6	7	45	8	80	0.91	631	75
TCXH4/4G	4	7	45	8	80	0.95	833	95
TCXH3/4G	3	7	45	6	80	1.01	1,021	115
TCXH2/4G	2	7	45	6	80	1.08	1,226	130
TCXH1/4G	1	19	55	6	80	1.21	1,512	145
TCXH1/04G	1/0	19	55	6	80	1.31	1,845	170
TCXH2/04G	2/0	19	55	6	80	1.42	2,248	195
TCXH3/04G	3/0	19	55	4	80	1.53	2,792	225
TCXH4/04G	4/0	19	55	4	110	1.73	3,520	260
TCXH250/4G	250	37	65	4	110	1.86	4,067	290
TCXH300/4G	300	37	65	3	110	1.99	4,805	320
TCXH350/4G	350	37	65	3	110	2.10	5,508	350
TCXH400/4G	400	37	65	3	110	2.21	6,206	380
TCXH500/4G	500	37	65	2	110	2.40	7,636	430
TCXH600/4G	600	61	80	2	110	2.65	9,127	475
TCXH750/4G	750	61	80	1	140	2.95	11,412	535
TCXH1000/4G	1000	61	80	1/0	140	3.47	15,074	615

**Per NEC Table 310.15 (B)(16). Four-conductor ampacity assumes three are hot and one is neutral. †The overcurrent protection for items marked with an obelisk (†) shall not exceed 15 amps for #14 AWG, 20 amps for #12 AWG and 30 amps for #10 AWG per NEC 310-16 footnote. NOTE: The data shown is approximate and subject to standard industry tolerances.*

servicewire.com

Phoenix, AZ
877-623-9473

Culloden, WV
800-624-3572

Houston, TX
800-231-9473

TRAY & POWER CABLE

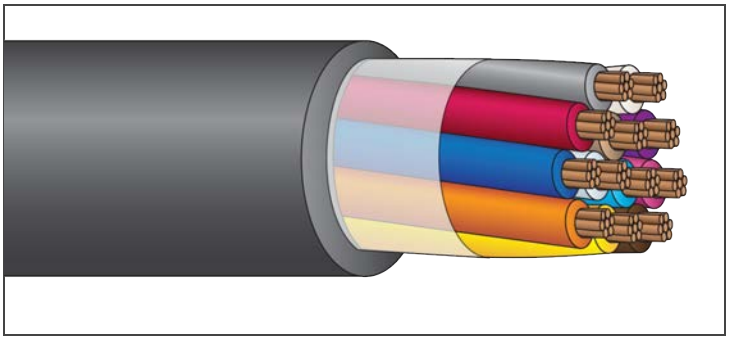

TRAY CABLE

XHHW-2 or RW90/ServiceCPE®

600 Volt Copper

ISO 9001:2008 RoHS COMPLIANT Made in the USA REACH COMPLIANCE

Description:

Class B stranded, annealed copper conductors, insulated with heat and moisture resistant crosslinked polyethylene *(type XHHW-2 VW-1 or RW90 FT-1)* and phase identified. Cabled with overall black CPE jacket. ***Available with tinned conductors.***

Application:

Suitable for use in hazardous locations: Class I - Div 2, Class II - Div 2

Standards:

UL 1277, CSA C22.2 #230/#239 TC/CIC
ICEA S-95-658/NEMA WC-70
Exposed Runs Rated *(TC-ER)*
IMSA 19-1
Flame Rated: IEEE 383 *(70,000 BTU)*, T-29-520 *(210,000 BTU)* *(#14 AWG and larger)*, IEEE 1202/CSA FT-4 *(#14 AWG and larger)*, Two-hour Firewall VW-1/FT-1 *(conductors)*
Temperature Rated at 90°C Wet/Dry
Sunlight and Oil Resistant I Jacket
Direct Burial
Color Code: K-2 *(optional color codes available)*
RoHS Compliant

Part Number	Number of Conductors	Overall Jacket (mils)	Nominal Diameter (in.)	Approx. Net Weight (lb./1000')
*TCCPE16/2FL	2 (flat)	45	0.33 X 0.21	49
*TCCPE16/3	3	45	0.35	63
*TCCPE16/4	4	45	0.38	78
*TCCPE16/5	5	45	0.41	93
*TCCPE16/7	7	45	0.45	120
*TCCPE16/9	9	60	0.55	167
*TCCPE16/12	12	60	0.64	217
*TCCPE16/19	19	60	0.74	315
*TCCPE16/25	25	60	0.82	399
*TCCPE16/37	37	80	1.02	602
TCCPE14/2FL	2 (flat)	45	0.36 X 0.22	63
TCCPE14/3	3	45	0.38	83
TCCPE14/4	4	45	0.41	103
TCCPE14/5	5	45	0.45	125
TCCPE14/7	7	45	0.49	164
TCCPE14/9	9	60	0.60	223
TCCPE14/12	12	60	0.69	293
TCCPE14/19	19	60	0.80	432
TCCPE14/25	25	80	0.94	586
TCCPE14/37	37	80	1.11	829

Part Number	Number of Conductors	Overall Jacket (mils)	Nominal Diameter (in.)	Approx. Net Weight (lb./1000')
TCCPE12/2FL	2 (flat)	45	0.39 X 0.24	84
TCCPE12/3	3	45	0.42	112
TCCPE12/4	4	45	0.46	142
TCCPE12/5	5	45	0.50	173
TCCPE12/7	7	60	0.58	246
TCCPE12/9	9	60	0.67	310
TCCPE12/12	12	60	0.77	408
TCCPE12/19	19	80	0.94	645
TCCPE12/25	25	80	1.04	822
TCCPE12/37	37	80	1.24	1,174
TCCPE10/2FL	2 (flat)	45	0.44 X 0.27	113
TCCPE10/3	3	45	0.47	155
TCCPE10/4	4	45	0.51	199
TCCPE10/5	5	60	0.59	259
TCCPE10/7	7	60	0.64	344
TCCPE10/9	9	60	0.75	436
TCCPE10/12	12	80	0.91	608
TCCPE10/19	19	80	1.05	909
TCCPE10/25	25	80	1.18	1,166
TCCPE10/37	37	80	1.40	1,677

**#16 AWG per UL 66 Fixture Wire type FFH-2. NOTE: The data shown is approximate and subject to standard industry tolerances.*

servicewire.com

Phoenix, AZ
877-623-9473

Culloden, WV
800-624-3572

Houston, TX
800-231-9473

TRAY & POWER CABLE

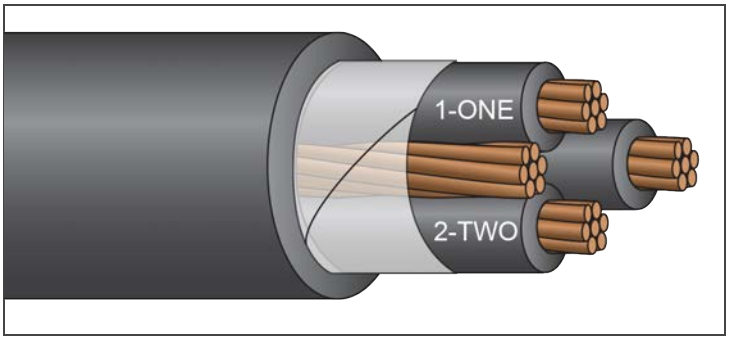

TRAY CABLE

XHHW-2 or RW90/ServiceCPE®

600 Volt Copper

3 Conductor

ISO 9001: 2015 RoHS COMPLIANT Made in the USA REACH

Description:

3 conductors, stranded, insulated with heat and moisture resistant crosslinked polyethylene *(type XHHW-2 or RW90)* and phase identified. Cabled with fillers *(when necessary)* and bare copper ground conductor. Cable core covered with binder tape and overall black CPE jacket. ***Available with tinned conductors.***

Application:

Suitable for use in hazardous locations: Class I - Div 2, Class II - Div 2

Standards:

UL 1277, CSA C22.2 #230 TC
ICEA S-95-658/NEMA WC-70
Exposed Runs Rated *(TC-ER)*
IMSA 19-1
Flame Rated: IEEE 383 *(70,000 BTU)*,
T-29-520 *(210,000 BTU) (available upon request)*,
IEEE 1202/CSA FT-4 *(available upon request)*,
Two-hour Firewall
Temperature Rated at 90°C Wet/Dry
Sunlight and Oil Resistant I Jacket
Direct Burial
Color Code: Method 4, K-2 *(#14 AWG - #8 AWG)*
(optional color codes available)
RoHS Compliant

Part Number	Size (AWG or Kcmil)	Strand (no.)	Insulation Thickness (mils)	Grounding Conductor (AWG)	Jacket Thickness (mils)	Approx. Diameter Overall (in.)	Approx. Net Weight (lb./1000')	Ampacity* (30°C ambient) 90°C Wet/Dry
TCCPE14/3G	14	7	30	14	45	0.38	95	25†
TCCPE12/3G	12	7	30	12	45	0.42	133	30†
TCCPE10/3G	10	7	30	10	45	0.47	188	40†
TCCPE8/3G	8	7	45	10	60	0.62	292	55
TCCPE6/3G	6	7	45	8	60	0.72	451	75
TCCPE4/3G	4	7	45	8	80	0.87	666	95
TCCPE3/3G	3	7	45	6	80	0.92	816	115
TCCPE2/3G	2	7	45	6	80	0.99	973	130
TCCPE1/3G	1	19	55	6	80	1.10	1,193	145
TCCPE1/03G	1/0	19	55	6	80	1.19	1,447	170
TCCPE2/03G	2/0	19	55	6	80	1.28	1,754	195
TCCPE3/03G	3/0	19	55	4	80	1.39	2,179	225
TCCPE4/03G	4/0	19	55	4	80	1.51	2,661	260
TCCPE250/3G	250	37	65	4	80	1.63	3,073	290
TCCPE350/3G	350	37	65	3	110	1.90	4,273	350
TCCPE500/3G	500	37	65	2	110	2.17	5,901	430
TCCPE600/3G	600	61	80	2	110	2.40	7,039	475
TCCPE750/3G	750	61	80	1	110	2.61	8,662	535
TCCPE1000/3G	1000	61	80	1/0	140	3.13	11,626	615

**Per NEC Table 310.15 (B)(16). †The overcurrent protection for items marked with an obelisk (†) shall not exceed 15 amps for #14 AWG, 20 amps for #12 AWG and 30 amps for #10 AWG per NEC 310-16 footnote. NOTE: The data shown is approximate and subject to standard industry tolerances.*

servicewire.com

Phoenix, AZ
877-623-9473

Culloden, WV
800-624-3572

Houston, TX
800-231-9473

TRAY & POWER CABLE

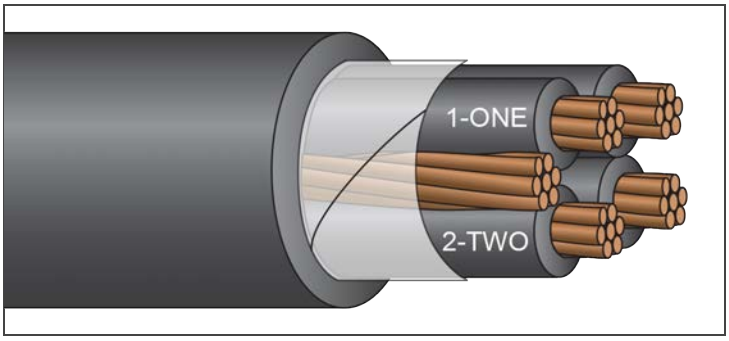

TRAY CABLE

XHHW-2 or RW90/ServiceCPE®

600 Volt Copper

4 Conductor

ISO 9001: 2015 RoHS COMPLIANT Made in the USA REACH

Description:

4 conductors, stranded, insulated with heat and moisture resistant crosslinked polyethylene *(type XHHW-2 or RW90)* and phase identified. Cabled with fillers *(when necessary)* and bare copper ground conductor. Cable core covered with binder tape and overall black CPE jacket. ***Available with tinned conductors.***

Application:

Suitable for use in hazardous locations: Class I - Div 2, Class II - Div 2

Standards:

UL 1277, CSA C22.2 #230 TC
ICEA S-95-658/NEMA WC-70
Exposed Runs Rated *(TC-ER)*
IMSA 19-1
Flame Rated: IEEE 383 *(70,000 BTU)*,
T-29-520 *(210,000 BTU) (available upon request)*,
IEEE 1202/CSA FT-4 *(available upon request)*,
Two-hour Firewall
Temperature Rated at 90°C Wet/Dry
Sunlight and Oil Resistant I Jacket
Direct Burial
Color Code: Method 4, K-2 *(#14 AWG - #8 AWG)*
(optional color codes available)
RoHS Compliant

Part Number	Size (AWG or Kcmil)	Strand (no.)	Insulation Thickness (mils)	Grounding Conductor (AWG)	Jacket Thickness (mils)	Approx. Diameter Overall (in.)	Approx. Net Weight (lb./1000')	Ampacity* (30°C ambient) 90°C Wet/Dry
TCCPE14/4G	14	7	30	14	45	0.41	116	25†
TCCPE12/4G	12	7	30	12	45	0.46	162	30†
TCCPE10/4G	10	7	30	10	45	0.51	231	40†
TCCPE8/4G	8	7	45	10	60	0.68	363	55
TCCPE6/4G	6	7	45	8	60	0.79	560	75
TCCPE4/4G	4	7	45	8	80	0.95	833	95
TCCPE3/4G	3	7	45	6	80	1.01	1,021	115
TCCPE2/4G	2	7	45	6	80	1.08	1,226	130
TCCPE1/4G	1	19	55	6	80	1.21	1,512	145
TCCPE1/04G	1/0	19	55	6	80	1.31	1,845	170
TCCPE2/04G	2/0	19	55	6	80	1.42	2,248	195
TCCPE3/04G	3/0	19	55	4	80	1.53	2,792	225
TCCPE4/04G	4/0	19	55	4	110	1.73	3,520	260
TCCPE250/4G	250	37	65	4	110	1.86	4,072	290
TCCPE350/4G	350	37	65	3	110	2.10	5,514	350
TCCPE500/4G	500	37	65	2	110	2.40	7,643	430
TCCPE600/4G	600	61	80	2	110	2.65	9,134	475
TCCPE750/4G	750	61	80	1	140	2.95	11,423	535
TCCPE1000/4G	1000	61	80	1/0	140	3.47	15,085	615

**Per NEC Table 310.15 (B)(16). Four-conductor ampacity assumes three are hot and one is neutral. †The overcurrent protection for items marked with an obelisk (†) shall not exceed 15 amps for #14 AWG, 20 amps for #12 AWG and 30 amps for #10 AWG per NEC 310-16 footnote. NOTE: The data shown is approximate and subject to standard industry tolerances.*

servicewire.com

Phoenix, AZ
877-623-9473

Culloden, WV
800-624-3572

Houston, TX
800-231-9473

TRAY & POWER CABLE

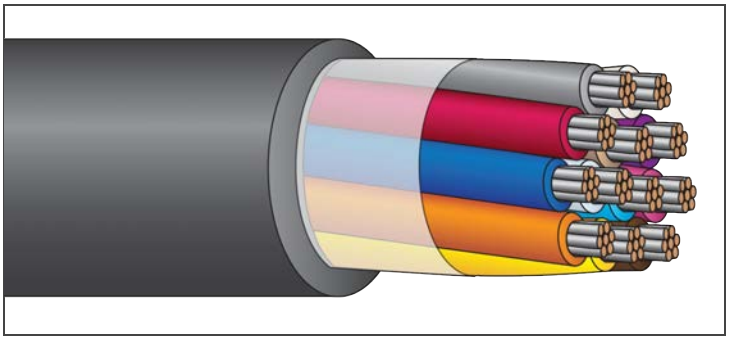

TRAY CABLE

XHHW-2 or RW90/EnviroPlus®

600 Volt Copper, Zero Halogen, Limited Smoke

Factory Mutual Group 1

ISO 9001:2008 RoHS COMPLIANT Made in the USA REACH LEED FRIENDLY FM APPROVED

Description:

Conductors are stranded, annealed copper, insulated with heat and moisture resistant crosslinked polyethylene *(type XHHW- 2 or RW90)* and phase identified. Cabled with fillers *(when necessary)*. Cable core is covered with binder tape and an overall black zero halogen, limited smoke, zero lead jacket.
Available with non-tinned conductors.

Application:

Suitable for use in hazardous locations: Class I - Div 2, Class II - Div 2

Standards:

UL1277, CSA C22.2 #230/#239 TC/CIC
ICEA S-95-658/NEMA WC-70
Exposed Runs Rated *(TC-ER)*
IMSA 19-1
Flame Rated: IEEE 383 *(70,000 BTU),* IEEE 1202/CSA FT-4, UL1685 and UL 1581, Two-hour Firewall
Temperature Rated 90°C Wet/Dry, Cold Temperature Rated at -40°C
Sunlight Resistant
Direct Burial
Color Code: K-2 *(optional color codes available)*
Zero Halogen, Limited Smoke Jacket
RoHS Compliant

Part Number	Number of Conductors	Overall Jacket (mils)	Nominal Diameter (in.)	Approx. Net Weight (lb./1000')	Ampacity* (30°C ambient) 90°C Wet/Dry
TCNH14/2T	2	45	0.39	70	25†
TCNH14/3T	3	45	0.41	90	25†
TCNH14/4T	4	45	0.45	111	20†
TCNH14/5T	5	45	0.48	133	20†
TCNH14/7T	7	60	0.55	189	17†
TCNH14/9T	9	60	0.64	236	17†
TCNH14/12T	12	60	0.71	299	12
TCNH14/19T	19	60	0.82	439	12
TCNH14/37T	37	80	1.12	841	10
TCNH12/2T	2	45	0.43	91	30†
TCNH12/3T	3	45	0.45	120	30†
TCNH12/4T	4	45	0.49	151	24†
TCNH12/5T	5	60	0.57	199	24†
TCNH12/7T	7	60	0.61	258	21†
TCNH12/9T	9	60	0.70	324	21†
TCNH12/12T	12	60	0.79	414	15
TCNH12/19T	19	80	0.95	656	15
TCNH12/37T	37	80	1.26	1,188	12
TCNH10/2T	2	45	0.48	122	40†
TCNH10/3T	3	45	0.50	164	40†
TCNH10/4T	4	60	0.58	225	32†
TCNH10/5T	5	60	0.63	271	32†
TCNH10/7T	7	60	0.68	357	28
TCNH10/9T	9	60	0.79	450	28
TCNH10/12T	12	80	0.92	618	20
TCNH10/19T	19	80	1.07	920	20
TCNH10/37T	37	80	1.42	1,692	16

**Per NEC Table 310.15 (B)(16). (Ampacity derated in accordance with note 8a.) †The overcurrent protection for items marked with an (†) shall not exceed 15 amps for #14 AWG, and 20 amps for #12 AWG and 30 amps for #10 AWG per NEC 310-16 footnote. NOTE: The data shown is approximate and subject to standard industry tolerances.*

servicewire.com

Phoenix, AZ
877-623-9473

Culloden, WV
800-624-3572

Houston, TX
800-231-9473

TRAY & POWER CABLE

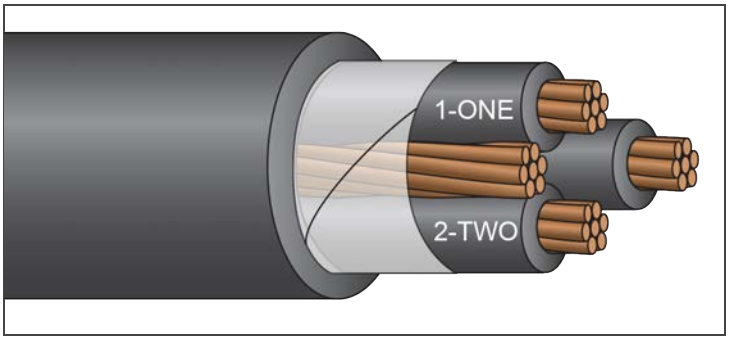

TRAY CABLE

XHHW-2 or RW90/EnviroPlus®

600 Volt Copper, Zero Halogen, Limited Smoke

3 Conductor, Factory Mutual Group 1

Description:

3 conductors, stranded copper, insulated with heat and moisture resistant crosslinked polyethylene *(type XHHW-2 or RW90)* and phase identified. Cabled with fillers and bare copper ground conductor. Cable core is covered with binder tape and overall black zero halogen, limited smoke, zero lead jacket.
Available with tinned conductors.

Application:

Suitable for use in hazardous locations: Class I - Div 2, Class II - Div 2

Standards:

UL1277, CSA C22.2 #230 TC
ICEA S-95-658/NEMA WC-70
Exposed Runs Rated *(TC-ER)*
IMSA 19-1
Flame Rated: IEEE 383 *(70,000 BTU),* IEEE 1202/CSA FT-4
UL1685 and UL 1581, Two-hour Firewall
Temperature Rated at 90°C Wet/Dry
Cold Temperature Rated at -40°C
Sunlight Resistant
Direct Burial
Color Code: Method 4, K-2 *(#8 AWG)*
Zero Halogen, Limited Smoke Jacket
RoHS Compliant

Part Number	Size (AWG or Kcmil)	Strand (no.)	Insulation Thickness (mils)	Grounding Conductor (AWG)	Jacket Thickness (mils)	Approx. Diameter Overall (in.)	Approx. Net Weight (lb./1000')	Ampacity* (30°C ambient) 90°C Wet/Dry
TCNH8/3G	8	7	45	10	60	0.66	305	55
TCNH8/3GG	8	7	45	10	60	0.71	319	55
TCNH6/3G	6	7	45	8	60	0.74	457	75
TCNH6/3GG	6	7	45	8	60	0.81	489	75
TCNH4/3G	4	7	45	8	80	0.89	675	95
TCNH3/3G	3	7	45	6	80	0.94	827	115
TCNH2/3G	2	7	45	6	80	1.00	984	130
TCNH1/3G	1	19	55	6	80	1.11	1,205	145
TCNH1/03G	1/0	19	55	6	80	1.20	1,495	170
TCNH2/03G	2/0	19	55	6	80	1.30	1,768	195
TCNH3/03G	3/0	19	55	4	80	1.40	2,194	225
TCNH4/03G	4/0	19	55	4	80	1.53	2,676	260
TCNH250/3G	250	37	65	4	80	1.64	3,084	290
TCNH350/3G	350	37	65	3	110	1.92	4,294	350
TCNH500/3G	500	37	65	2	110	2.19	5,925	430
TCNH600/3G	600	61	80	2	110	2.41	7,064	475
TCNH750/3G	750	61	80	1	110	2.62	8,690	535
TCNH1000/3G	1000	61	80	1/0	140	3.14	11,682	615

**Per NEC Table 310.15 (B)(16). Four-conductor ampacity assumes three are hot and one is neutral. NOTE: The data shown is approximate and subject to standard industry tolerances.*

servicewire.com

Phoenix, AZ
877-623-9473

Culloden, WV
800-624-3572

Houston, TX
800-231-9473

TRAY & POWER CABLE

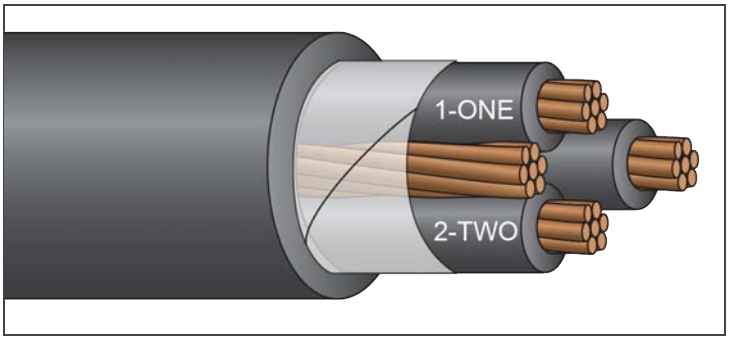

TRAY CABLE

XHHW-2 or RW90/EnviroPlus®

600 Volt Copper, Zero Halogen, Limited Smoke

4 Conductor, Factory Mutual Group 1

Description:

4 conductors, stranded copper, insulated with heat and moisture resistant crosslinked polyethylene *(type XHHW-2 or RW90)* and phase identified. Cabled with fillers and bare copper ground conductor. Cable core is covered with binder tape and overall black zero halogen, limited smoke, zero lead jacket.
Available with tinned conductors.

Application:

Suitable for use in hazardous locations: Class I - Div 2, Class II - Div 2

Standards:

UL1277, CSA C22.2 #230 TC
ICEA S-95-658/NEMA WC-70
Exposed Runs Rated *(TC-ER)*
IMSA 19-1
Flame Rated: IEEE 383 *(70,000 BTU),* IEEE 1202/CSA FT-4
UL1685 and UL 1581, Two-hour Firewall
Temperature Rated at 90°C Wet/Dry
Cold Temperature Rated at -40°C
Sunlight Resistant
Direct Burial
Color Code: Method 4, K-2 *(#8 AWG)*
Zero Halogen, Limited Smoke Jacket
RoHS Compliant

Part Number	Size (AWG or Kcmil)	Strand (no.)	Insulation Thickness (mils)	Grounding Conductor (AWG)	Jacket Thickness (mils)	Approx. Diameter Overall (in.)	Approx. Net Weight (lb./1000')	Ampacity* (30°C ambient) 90°C Wet/Dry
TCNH8/4G	8	7	45	10	60	0.72	378	55
TCNH8/4GG	8	7	45	10	60	0.78	392	55
TCNH6/4G	6	7	45	8	60	0.81	568	75
TCNH6/4GG	6	7	45	8	80	0.92	640	75
TCNH4/4G	4	7	45	8	80	0.97	845	95
TCNH3/4G	3	7	45	6	80	1.03	1,035	115
TCNH2/4G	2	7	45	6	80	1.10	1,240	130
TCNH1/4G	1	19	55	6	80	1.22	1,528	145
TCNH1/04G	1/0	19	55	6	80	1.32	1,862	170
TCNH2/04G	2/0	19	55	6	80	1.43	2,265	195
TCNH3/04G	3/0	19	55	4	80	1.55	2,811	225
TCNH4/04G	4/0	19	55	4	110	1.75	3,549	260
TCNH250/4G	250	37	65	4	110	1.88	4,093	290
TCNH350/4G	350	37	65	3	110	2.12	5,537	350
TCNH500/4G	500	37	65	2	110	2.42	7,669	430
TCNH600/4G	600	61	80	2	110	2.67	9,163	475
TCNH750/4G	750	61	80	1	140	2.97	11,466	535
TCNH1000/4G	1000	61	80	1/0	140	3.48	15,148	615

**Per NEC Table 310.15 (B)(16). Four-conductor ampacity assumes three are hot and one is neutral. NOTE: The data shown is approximate and subject to standard industry tolerances.*

servicewire.com

Phoenix, AZ
877-623-9473

Culloden, WV
800-624-3572

Houston, TX
800-231-9473

TRAY & POWER CABLE

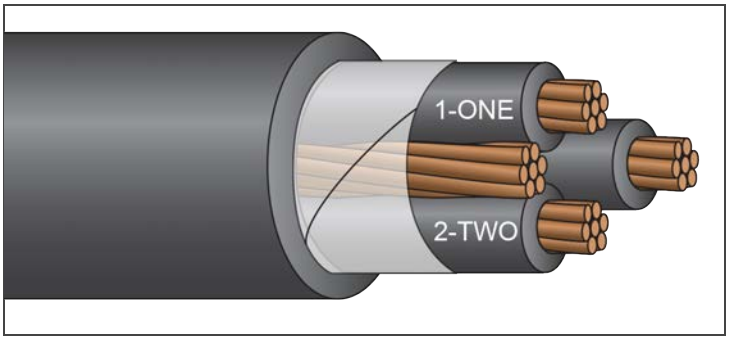

TRAY CABLE

XHHW-2 or RW90/EnviroPlus® 50% Ground

600 Volt Copper, Zero Halogen, Limited Smoke

3 or 4 Conductor, Factory Mutual Group 1

Description:

3 or 4 conductors, stranded copper, insulated with heat and moisture resistant crosslinked polyethylene *(type XHHW-2 or RW90)* and phase identified. Cabled with fillers and 3 bare copper ground conductors. Cable core is covered with binder tape and overall black zero halogen, limited smoke, zero lead jacket. ***Available with tinned conductors.***

Application:

Suitable for use in hazardous locations: Class I - Div 2, Class II - Div 2

Standards:

UL1277, CSA C22.2 #230 TC
ICEA S-95-658/NEMA WC-70
Exposed Runs Rated *(TC-ER)*
IMSA 19-1
Flame Rated: IEEE 383 *(70,000 BTU),* IEEE 1202/CSA FT-4, UL1685 and UL 1581, Two-hour Firewall
Temperature Rated at 90°C Wet/Dry
Cold Temperature Rated at -40°C
Sunlight Resistant
Direct Burial
Color Code: Method 4, K-2 *(#8 AWG)*
Zero Halogen, Limited Smoke Jacket
RoHS Compliant

Part Number	Size (AWG or Kcmil)	Strand (no.)	Insulation Thickness (mils)	Grounding Conductors (AWG)	Jacket Thickness (mils)	Approx. Diameter Overall (in.)	Approx. Net Weight (lb/1000')	Ampacity* (30°C ambient) 90°C Wet/Dry
TCNH8/3G3#14	8	7	45	3-#14	60	0.66	311	55
TCNH6/3G3#12	6	7	45	3-#12	60	0.74	466	75
TCNH4/3G3#10	4	7	45	3-#10	80	0.89	717	95
TCNH2/3G3#8	2	7	45	3-#8	80	1.00	1,050	130
TCNH1/3G3#8	1	19	55	3-#8	80	1.11	1,271	145
TCNH1/03G3#6	1/0	19	55	3-#6	80	1.20	1,610	170
TCNH2/03G3#6	2/0	19	55	3-#6	80	1.30	1,918	195
TCNH3/03G3#4	3/0	19	55	3-#4	80	1.40	2,432	225
TCNH4/03G3#4	4/0	19	55	3-#4	80	1.53	2,914	260
TCNH250/3G3#4	250	37	65	3-#4	80	1.64	3,322	290
TCNH350/3G3#2	350	37	65	3-#2	110	1.92	4,713	350
TCNH500/3G3#1	500	37	65	3-#1	110	2.19	6,461	430
TCNH750/3G3-2/0	750	61	80	3-2/0	110	2.62	9,602	535
TCNH1000/3G3-3/0	1000	61	80	3-3/0	140	3.14	12,832	615
TCNH8/4G3#14	8	7	45	3-#14	60	0.72	384	55
TCNH6/4G3#12	6	7	45	3-#12	60	0.81	577	75
TCNH4/4G3#10	4	7	45	3-#10	80	0.97	887	95
TCNH2/4G3#8	2	7	45	3-#8	80	1.10	1,306	130
TCNH1/4G3#8	1	19	55	3-#8	80	1.22	1,594	145
TCNH1/04G3#6	1/0	19	55	3-#6	80	1.32	2,011	170
TCNH2/04G3#6	2/0	19	55	3-#6	80	1.43	2,415	195
TCNH3/04G3#4	3/0	19	55	3-#4	80	1.55	3,049	225
TCNH4/04G3#4	4/0	19	55	3-#4	110	1.75	3,787	260
TCNH250/4G3#4	250	37	65	3-#4	110	1.88	4,330	290
TCNH350/4G3#2	350	37	65	3-#2	110	2.12	5,956	350
TCNH500/4G3#1	500	37	65	3-#1	110	2.42	8,206	430
TCNH750/4G3-2/0	750	61	80	3-2/0	140	2.97	12,378	535
TCNH1000/4G3-3/0	750	61	80	3-3/0	140	3.48	16,298	615

**Per NEC Table 310.15 (B)(16). Four-conductor ampacity assumes three are hot and one is neutral. NOTE: The data shown is approximate and subject to standard industry tolerances.*

servicewire.com

Phoenix, AZ
877-623-9473

Culloden, WV
800-624-3572

Houston, TX
800-231-9473

TRAY & POWER CABLE

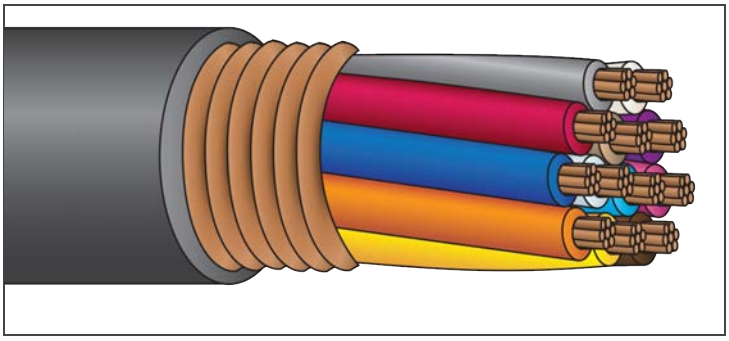

TRAY CABLE

XHHW-2 or RW90/PVC, Shielded

600 Volt Copper

ISO 9001:2008 RoHS COMPLIANT Made in the USA REACH

Description:

Class B stranded, annealed copper conductors, insulated with heat and moisture resistant crosslinked polyethylene *(type XHHW- 2 or RW90)* and phase identified. Cabled with fillers *(when necessary)*. Cable core covered with mylar binder tape, longitudinally applied corrugated copper tape shield and an overall black PVC jacket. ***Available with tinned conductors. Jacket available in colors.***

Application:

Suitable for use in hazardous locations: Class I - Div 2, Class II - Div 2

Standards:

UL 1277, CSA C22.2 #230/#239 TC/CIC
ICEA S-95-658/NEMA WC-70
Exposed Runs Rated *(TC-ER)*
IMSA 19-1
Flame Rated: IEEE 383 *(70,000 BTU),* IEEE 1202/CSA FT-4,
Two-hour Firewall
Temperature Rated at 90°C Wet/Dry
Sunlight and Oil Resistant II Jacket
Direct Burial
Color Code: K-2 *(optional color codes available)*
RoHS Compliant

Part Number	Number of Conductors	Overall Jacket (mils)	Nominal Diameter (inches)	Approx. Net Weight (lb./1000')	Ampacity* (30°C ambient) 90°C Wet/Dry
TCXHSHC14/2	2	45	0.45	107	25†
TCXHSHC14/3	3	45	0.47	127	25†
TCXHSHC14/4	4	45	0.50	151	20†
TCXHSHC14/5	5	60	0.57	190	20†
TCXHSHC14/7	7	60	0.61	237	17†
TCXHSHC14/9	9	60	0.69	286	17†
TCXHSHC14/12	12	60	0.76	353	12
TCXHSHC14/19	19	80	0.91	536	12
TCXHSHC12/2	2	45	0.48	128	30†
TCXHSHC12/3	3	45	0.51	159	30†
TCXHSHC12/4	4	60	0.58	209	24†
TCXHSHC12/5	5	60	0.62	243	24†
TCXHSHC12/7	7	60	0.67	305	21†
TCXHSHC12/9	9	60	0.76	376	21†
TCXHSHC12/12	12	80	0.88	503	15
TCXHSHC12/19	19	80	1.01	722	15
TCXHSHC10/2	2	60	0.56	176	40†
TCXHSHC10/3	3	60	0.59	222	40†
TCXHSHC10/4	4	60	0.63	270	32†
TCXHSHC10/5	5	60	0.68	318	32†
TCXHSHC10/7	7	60	0.73	409	28†
TCXHSHC10/9	9	80	0.88	540	28†
TCXHSHC10/12	12	80	0.98	685	20
TCXHSHC10/19	19	80	1.12	994	20

**Per NEC Table 310.15 (B)(16) (Ampacity derated in accordance with note 8a). †The overcurrent protection for items marked with an (†) shall not exceed 15 amps for #14 AWG, 20 amps for #12 AWG and 30 amps for #10 AWG per NEC 310-16 footnote. NOTE: The data shown is approximate and subject to standard industry tolerances.*

TRAY & POWER CABLE

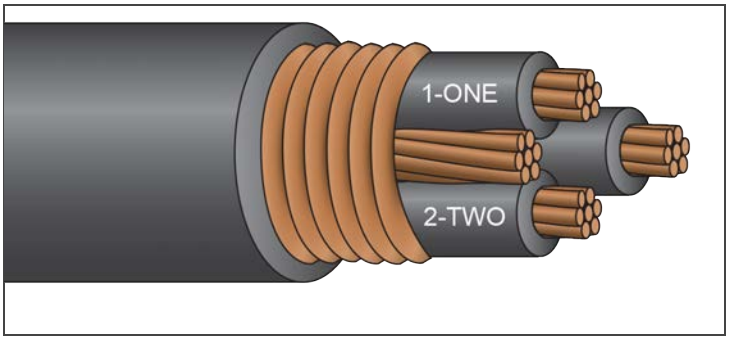

TRAY CABLE

XHHW-2 or RW90/PVC, Shielded

600 Volt Copper

3 or 4 Conductor

Description:

3 or 4 conductors, stranded, insulated with heat and moisture resistant crosslinked polyethylene *(type XHHW-2 or RW90)* and phase identified. Cabled with fillers *(when necessary)* and bare copper ground conductor. Cable core covered with mylar binder tape, longitudinally applied corrugated copper tape shield and overall black PVC jacket. ***Available with tinned conductors. Jacket available in colors.***

Application:

Suitable for use in hazardous locations: Class I - Div 2, Class II - Div 2

Standards:

UL1277, CSA C22.2 #230 TC
ICEA S-95-658/NEMA WC-70
Exposed Runs Rated *(TC-ER) (#4 AWG and larger),*
(#6 AWG and smaller with green ground or no ground)
IMSA 19-1
Flame Rated: IEEE 383 *(70,000 BTU),* IEEE 1202/CSA FT-4
Two Hour Firewall
Temperature Rated at 90°C Wet/Dry
Sunlight and Oil Resistant II Jacket
Direct Burial
Color Code: Method 4, K-2 *(#14 AWG - #8 AWG)*
RoHS Compliant

Part Number	Size (AWG or Kcmil)	Strand (no.)	Insulation Thickness (mils)	Grounding Conductor (AWG)	PVC Jacket Thickness (mils)	Approx. Diameter Overall (in.)	Approx. Net Weight (lb./1000')	Ampacity* (30°C ambient) 90°C Wet/Dry
TCXHSHC14/3G	14	7	30	14	45	0.40	134	25†
TCXHSHC12/3G	12	7	30	12	45	0.44	174	30†
TCXHSHC10/3G	10	7	30	10	45	0.49	232	40†
TCXHSHC8/3G	8	7	45	10	60	0.64	346	55
TCXHSHC6/3G	6	7	45	8	60	0.72	504	75
TCXHSHC4/3G	4	7	45	8	80	0.87	728	95
TCXHSHC2/3G	2	7	45	6	80	0.99	1,043	130
TCXHSHC1/3G	1	19	55	6	80	1.10	1,272	145
TCXHSHC14/4G	14	7	30	14	45	0.43	157	25†
TCXHSHC12/4G	12	7	30	12	45	0.48	207	30†
TCXHSHC10/4G	10	7	30	10	60	0.56	294	40†
TCXHSHC8/4G	8	7	45	10	60	0.70	424	55
TCXHSHC6/4G	6	7	45	8	60	0.79	617	75
TCXHSHC4/4G	4	7	45	8	80	0.95	901	95
TCXHSHC2/4G	2	7	45	6	80	1.09	1,306	130

**Per NEC Table 310.15 (B)(16). Four-conductor ampacity assumes three are hot and one is neutral. †The overcurrent protection for items marked with an obelisk (†) shall not exceed 15 amps for #14 AWG, 20 amps for #12 AWG and 30 amps for #10 AWG per NEC 310-16 footnote. NOTE: The data shown is approximate and subject to standard industry tolerances.*

servicewire.com

Phoenix, AZ
877-623-9473

Culloden, WV
800-624-3572

Houston, TX
800-231-9473

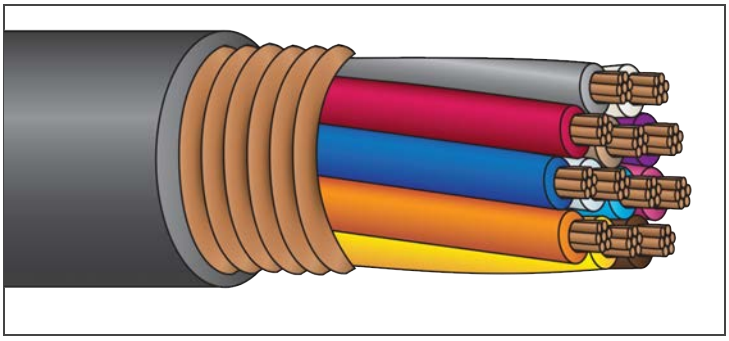

TRAY CABLE

XHHW-2 or RW90/ServiceCPE®, Shielded

600 Volt Copper

Description:

Conductors are stranded, annealed copper, insulated with heat and moisture resistant crosslinked polyethylene *(type XHHW-2 or RW90)* and phase identified. Cabled with fillers *(when necessary)*. Cable core is covered with binder tape, longitudinally applied corrugated copper tape shield and an overall black CPE jacket.

Available with tinned conductors.

Application:

Suitable for use in hazardous locations: Class I - Div 2, Class II - Div 2

Standards:

UL1277, CSA C22.2 #230/#239 TC/CIC
ICEA S-95-658/NEMA WC-70
Exposed Runs Rated *(TC-ER)*
IMSA 19-1
Flame Rated: IEEE 383 *(70,000 BTU),* IEEE 1202/CSA FT-4, UL 1581, Two-hour Firewall
Temperature Rated at 90°C Wet/Dry
Cold Temperature Rated at -25°C
Sunlight and Oil Resistant I Jacket
Direct Burial
Color Code: K-2 *(optional color codes available)*
RoHS Compliant

Part Number	Number of Conductors	Overall Jacket (mils)	Nominal Diameter (in.)	Approx. Net Weight (lb./1000')	Ampacity* (30°C ambient) 90°C Wet/Dry
TCCPESHC14/2	2	45	0.45	107	25†
TCCPESHC14/3	3	45	0.47	127	25†
TCCPESHC14/4	4	45	0.50	151	20†
TCCPESHC14/5	5	60	0.57	191	20†
TCCPESHC14/7	7	60	0.61	235	17†
TCCPESHC14/9	9	60	0.69	287	17†
TCCPESHC14/12	12	60	0.76	352	12
TCCPESHC14/19	19	80	0.91	538	12
TCCPESHC12/2	2	45	0.48	128	30†
TCCPESHC12/3	3	45	0.51	160	30†
TCCPESHC12/4	4	60	0.58	209	24†
TCCPESHC12/5	5	60	0.62	244	24†
TCCPESHC12/7	7	60	0.67	306	21†
TCCPESHC12/9	9	60	0.76	377	21†
TCCPESHC12/12	12	80	0.88	505	15
TCCPESHC12/19	19	80	1.01	724	15
TCCPESHC10/2	2	60	0.56	176	40†
TCCPESHC10/3	3	60	0.59	222	40†
TCCPESHC10/4	4	60	0.63	270	32†
TCCPESHC10/5	5	60	0.68	318	32†
TCCPESHC10/7	7	60	0.73	409	28†
TCCPESHC10/9	9	80	0.88	540	28†
TCCPESHC10/12	12	80	0.98	685	20
TCCPESHC10/19	19	80	1.12	994	20

**Per NEC Table 310.15 (B)(16) (Ampacity derated in accordance with note 8a). †The overcurrent protection for items marked with an (†) shall not exceed 15 amps for #14 AWG, 20 amps for #12 AWG and 30 amps for #10 AWG per NEC 310-16 footnote. NOTE: The data shown is approximate and subject to standard industry tolerances.*

TRAY & POWER CABLE

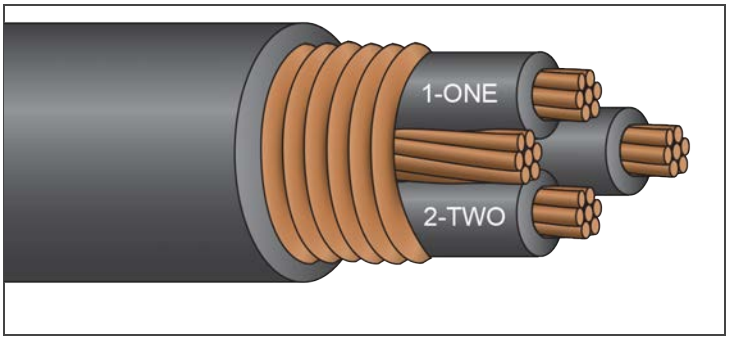

TRAY CABLE

XHHW-2 or RW90/ServiceCPE®, Shielded

600 Volt Copper

3 or 4 Conductor

Description:

3 or 4 stranded copper conductors, insulated with heat and moisture resistant crosslinked polyethylene *(type XHHW-2 or RW90)* and phase identified. Cabled with fillers and bare copper ground conductor. Cable core is covered with binder tape, longitudinally applied corrugated copper tape shield, and overall black CPE jacket. ***Available with tinned conductors.***

Application:

Suitable for use in hazardous locations: Class I - Div 2, Class II - Div 2

Standards:

UL1277, CSA C22.2 #230 TC
ICEA S-95-658/NEMA WC-70
Exposed Runs Rated *(TC-ER)*
IMSA 19-1
Flame Rated: IEEE 383 *(70,000 BTU),* IEEE 1202/CSA FT-4
UL 1581, Two-hour Firewall
Temperature Rated at 90°C Wet/Dry
Cold Temperature Rated at -25°C
Sunlight and Oil Resistant I Jacket
Direct Burial
Color Code: Method 4, K-2 *(#14 AWG - #8 AWG)*
RoHS Compliant

Part Number	Size (AWG)	Strand (no.)	Insulation Thickness (mils)	Grounding Conductor (AWG)	Jacket Thickness (mils)	Approx. Diameter Overall (in.)	Approx. Net Weight (lb./1000')	Ampacity* (30°C ambient) 90°C Wet/Dry
TCCPESHC14/3G	14	7	30	14	45	0.40	134	25†
TCCPESHC12/3G	12	7	30	12	45	0.44	175	30†
TCCPESHC10/3G	10	7	30	10	45	0.49	233	40†
TCCPESHC8/3G	8	7	45	10	60	0.64	347	55
TCCPESHC6/3G	6	7	45	8	60	0.72	505	75
TCCPESHC4/3G	4	7	45	8	80	0.87	729	95
TCCPESHC2/3G	2	7	45	6	80	0.99	1,045	130
TCCPESHC1/3G	1	19	55	6	80	1.10	1,274	145
TCCPESHC14/4G	14	7	30	14	45	0.43	158	25†
TCCPESHC12/4G	12	7	30	12	45	0.48	208	30†
TCCPESHC10/4G	10	7	30	10	60	0.56	295	40†
TCCPESHC8/4G	8	7	45	10	60	0.70	426	55
TCCPESHC6/4G	6	7	45	8	60	0.79	618	75
TCCPESHC4/4G	4	7	45	8	80	0.95	903	95
TCCPESHC2/4G	2	7	45	6	80	1.08	1,309	130

**Per NEC Table 310.15 (B)(16). Four-conductor ampacity assumes three are hot and one is neutral. †The overcurrent protection for items marked with an obelisk (†) shall not exceed 15 amps for #14 AWG, 20 amps for #12 AWG and 30 amps for #10 AWG per NEC 310-16 footnote. NOTE: The data shown is approximate and subject to standard industry tolerances.*

servicewire.com

Phoenix, AZ
877-623-9473

Culloden, WV
800-624-3572

Houston, TX
800-231-9473

TRAY & POWER CABLE

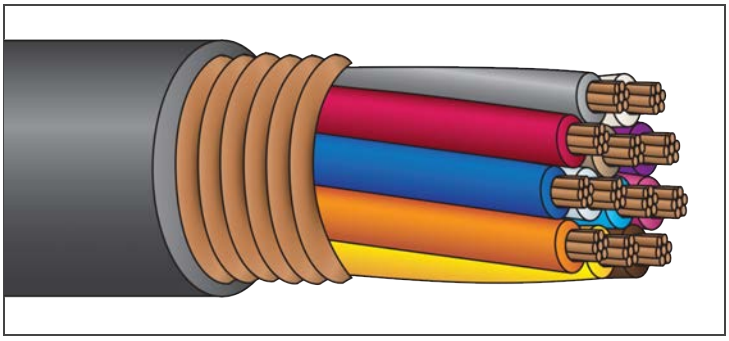

TRAY CABLE

XHHW-2 or RW90/EnviroPlus®, Shielded

600 Volt Copper, Zero Halogen, Limited Smoke

Factory Mutual Group 1

Description:

Conductors are stranded, annealed copper, insulated with heat and moisture resistant crosslinked polyethylene *(type XHHW- 2 or RW90)* and phase identified. Cabled with fillers *(when necessary)*. Cable core is covered with binder tape, longitudinally applied corrugated copper tape shield and an overall black zero halogen, limited smoke, zero lead jacket. ***Available with tinned conductors.***

Application:

Suitable for use in hazardous locations: Class I - Div 2, Class II - Div 2

Standards:

UL1277, CSA C22.2 #230/#239 TC/CIC
ICEA S-95-658/NEMA WC-70
Exposed Runs Rated *(TC-ER)*
IMSA 19-1
Flame Rated: IEEE 383 *(70,000 BTU),* IEEE 1202/CSA FT-4, UL1685 and UL 1581, Two-hour Firewall
Temperature Rated 90°C Wet/Dry
Cold Temperature Rated at -40°C
Sunlight Resistant
Direct Burial
Color Code: K-2 *(optional color codes available)*
Zero Halogen, Limited Smoke Jacket
RoHS Compliant

Part Number	Number of Conductors	Overall Jacket (mils)	Nominal Diameter (in.)	Approx. Net Weight (lb./1000')	Ampacity* (30°C ambient) 90°C Wet/Dry
TCNHSHC14/2	2	45	0.45	110	25†
TCNHSHC14/3	3	45	0.47	130	25†
TCNHSHC14/4	4	45	0.50	154	20†
TCNHSHC14/5	5	60	0.57	195	20†
TCNHSHC14/7	7	60	0.61	239	17†
TCNHSHC14/9	9	60	0.69	292	17†
TCNHSHC14/12	12	60	0.76	358	12
TCNHSHC14/19	19	80	0.91	547	12
TCNHSHC12/2	2	45	0.48	131	30†
TCNHSHC12/3	3	45	0.51	163	30†
TCNHSHC12/4	4	60	0.58	214	24†
TCNHSHC12/5	5	60	0.62	249	24†
TCNHSHC12/7	7	60	0.67	311	21†
TCNHSHC12/9	9	60	0.76	382	21†
TCNHSHC12/12	12	80	0.88	514	15
TCNHSHC12/19	19	80	1.01	734	15
TCNHSHC10/2	2	60	0.56	181	40†
TCNHSHC10/3	3	60	0.59	227	40†
TCNHSHC10/4	4	60	0.63	275	32†
TCNHSHC10/5	5	60	0.68	324	32†
TCNHSHC10/7	7	60	0.73	416	28†
TCNHSHC10/9	9	80	0.88	550	28†
TCNHSHC10/12	12	80	0.98	696	20
TCNHSHC10/19	19	80	1.12	1,007	20

**Per NEC Table 310.15 (B)(16). (Ampacity derated in accordance with note 8a.) †The overcurrent protection for items marked with an (†) shall not exceed 15 amps for #14 AWG, and 20 amps for #12 AWG and 30 amps for #10 AWG per NEC 310-16 footnote. NOTE: The data shown is approximate and subject to standard industry tolerances.*

servicewire.com

Phoenix, AZ
877-623-9473

Culloden, WV
800-624-3572

Houston, TX
800-231-9473

TRAY & POWER CABLE

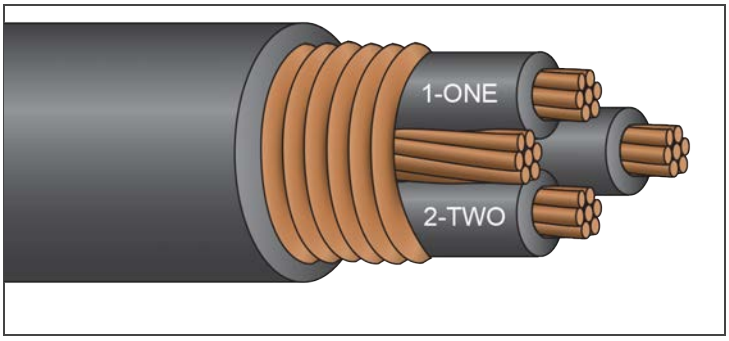

TRAY CABLE

XHHW-2 or RW90/EnviroPlus®, Shielded

600 Volt Copper, Zero Halogen, Limited Smoke

3 or 4 Conductor, Factory Mutual Group 1

Description:

3 or 4 conductors, stranded copper, insulated with heat and moisture resistant crosslinked polyethylene *(type XHHW-2 or RW90)* and phase identified. Cabled with fillers and bare copper ground conductor. Cable core is covered with binder tape, longitudinally applied corrugated copper tape shield and overall black zero halogen, limited smoke, zero lead jacket. ***Available with tinned conductors.***

Application:

Suitable for use in hazardous locations: Class I - Div 2, Class II - Div 2

Standards:

UL1277, CSA C22.2 #230 TC
ICEA S-95-658/NEMA WC-70
Exposed Runs Rated *(TC-ER)*
IMSA 19-1
Flame Rated: IEEE 383 *(70,000 BTU),* IEEE 1202/CSA FT-4, UL1685 and UL 1581, Two-hour Firewall
Temperature Rated at 90°C Wet/Dry, Cold Temperature Rated at -40°C
Sunlight Resistant
Direct Burial
Color Code: Method 4, K-2 *(#14 AWG - #8 AWG)*
Zero Halogen, Limited Smoke Jacket
RoHS Compliant

Part Number	Size (AWG)	Strand (no.)	Insulation Thickness (mils)	Grounding Conductor (AWG)	PVC Jacket Thickness (mils)	Approx. Diameter Overall (in.)	Approx. Net Weight (lb./1000')	Ampacity* (30°C ambient) 90°C Wet/Dry
TCNHSHC14/3G	14	7	30	14	45	0.40	136	25†
TCNHSHC12/3G	12	7	30	12	45	0.44	177	30†
TCNHSHC10/3G	10	7	30	10	45	0.49	235	40†
TCNHSHC8/3G	8	7	45	10	60	0.64	352	55
TCNHSHC6/3G	6	7	45	8	60	0.72	510	75
TCNHSHC4/3G	4	7	45	8	80	0.87	738	95
TCNHSHC2/3G	2	7	45	6	80	0.99	1,055	130
TCNHSHC1/3G	1	19	55	6	80	1.10	1,285	145
TCNHSHC14/4G	14	7	30	14	45	0.43	160	25†
TCNHSHC12/4G	12	7	30	12	45	0.48	210	30†
TCNHSHC10/4G	10	7	30	10	60	0.56	299	40†
TCNHSHC8/4G	8	7	45	10	60	0.70	431	55
TCNHSHC6/4G	6	7	45	8	60	0.79	624	75
TCNHSHC4/4G	4	7	45	8	80	0.95	912	95
TCNHSHC2/4G	2	7	45	6	80	1.08	1,320	130

**Per NEC Table 310.15 (B)(16). Four-conductor ampacity assumes three are hot and one is neutral. †The overcurrent protection for items marked with an obelisk (†) shall not exceed 15 amps for #14 AWG, 20 amps for #12 AWG and 30 amps for #10 AWG per NEC 310-16 footnote. NOTE: The data shown is approximate and subject to standard industry tolerances.*

servicewire.com

Phoenix, AZ
877-623-9473

Culloden, WV
800-624-3572

Houston, TX
800-231-9473

TRAY & POWER CABLE

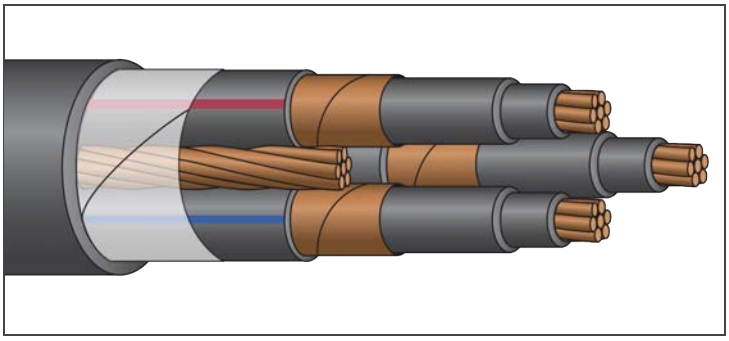

POWER CABLE

MV-90/MV-105, Nonshielded (100%)/Shielded (133%)

2,400/5,000 Volt Copper

Description:

3 phase identified conductors, cabled with fillers and bare copper ground conductor. Cable core covered with binder tape and overall PVC jacket. ***Jacket available in colors.***

Non-shielded: Class B stranded copper and extruded conductor shield, insulated with heat and moisture resistant EPR *(2,400V rated)*.
Shielded: Class B stranded copper and extruded semi-conductor shield, insulated with heat and moisture resistant EPR *(5,000V rated - 133% insulation level; 8,000V rated - 100% insulation level) with conductor jacket (PVC, CPE, etc.)*

Standards:

UL 1072
Non-shielded: ICEA S-96-659/NEMA WC-71
Shielded: ICEA S-93-639/NEMA WC-74
Conductors Rated at 105°C *(5kV)*/90°C *(2.4kV)*
Sunlight and Oil Resistant II Jacket
Direct Burial
Color Code: K-2 Stripes
RoHS Compliant

Part Number	Size (AWG or Kcmil)	Strand (no.)	Conductor Insulation Thickness (mils)	Conductor Jacket Thickness (mils)	Approx. Diameter Over Single Cond. (in.)	Grounding Conductor (AWG)	PVC Jacket Thickness (mils)	Approx. Diameter Overall (in.)	Approx. Net Weight (lb./1000')	Ampacity* (40°C ambient)
P2.4K8/3EG	8	7	125	80	0.58	8	80	1.45	944	58
P2.4K6/3EG	6	7	125	80	0.62	6	80	1.54	1,125	77
P2.4K4/3EG	4	7	125	80	0.67	6	80	1.64	1,363	100
P2.4K2/3EG	2	7	125	80	0.73	6	110	1.83	1,805	135
P2.4K1/03EG	1/0	19	125	80	0.80	4	110	1.98	2,379	155
P2.4K2/03EG	2/0	19	125	80	0.85	4	110	2.09	2,737	260
P2.4K4/03EG	4/0	19	125	95	1.01	3	110	2.44	4,063	285
P2.4K250/3EG	250	37	140	110	1.09	3	110	2.61	4,572	315
P2.4K350/3EG	350	37	140	110	1.19	2	140	2.88	5,970	390
P2.4K500/3EG	500	37	140	110	1.32	1	140	3.16	7,785	475
P2.4K750/3EG	750	61	155	125	1.56	1/0	140	3.68	11,106	585
P5KS6/3EG	6	7	115	60	0.67	6	80	1.64	1,378	77
P5KS4/3EG	4	7	115	60	0.73	6	110	1.83	1,775	100
P5KS2/3EG	2	7	115	60	0.78	6	110	1.94	2,115	135
P5KS1/3EG	1	19	115	60	0.82	4	110	2.03	2,491	155
P5KS1/03EG	1/0	19	115	80	0.91	4	110	2.22	2,908	185
P5KS2/03EG	2/0	19	115	80	0.96	4	110	2.33	3,301	210
P5KS4/03EG	4/0	19	115	80	1.05	3	110	2.52	4,324	285
P5KS250/3EG	250	37	115	80	1.11	3	110	2.65	4,872	315
P5KS350/3EG	350	37	115	80	1.21	2	140	2.93	6,289	390
P5KS500/3EG	500	37	115	80	1.36	1	140	3.25	8,244	475
P5KS750/3EG	750	61	115	80	1.55	1/0	140	3.66	11,350	585

**Per NEC Table 310.60 (C)(75). Based on one three-conductor cable. NOTE: The data shown is approximate and subject to standard industry tolerances.*

servicewire.com

Phoenix, AZ
877-623-9473

Culloden, WV
800-624-3572

Houston, TX
800-231-9473

TRAY & POWER CABLE

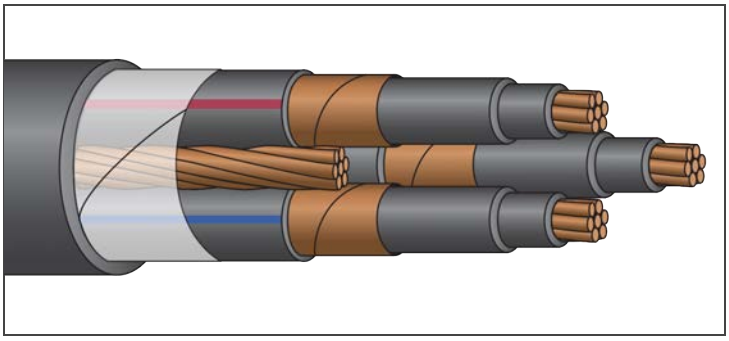

POWER CABLE

MV-105, 133% Jacketed EPR

15,000 Volt Copper

ISO 9001:2008 RoHS COMPLIANT Made in the USA REACH

Description:

Class B stranded copper, extruded semi-conductor shield, insulated with heat and moisture resistant EPR *(133% insulation level)*, with conductor jacket *(PVC, CPE, etc.)*. Phase identified and cabled with fillers and bare copper ground conductor. Cable core covered with binder tape and overall PVC jacket. ***Jacket available in colors.***

Standards:

UL 1072
ICEA S-93-639/NEMA WC-74
Temperature Rated at 105°C Wet/Dry *(conductors)*
Sunlight and Oil Resistant II Jacket
Direct Burial
Color Code: K-2 Stripes
RoHS Compliant

Part Number	Size (AWG or Kcmil)	Strand (no.)	Conductor Insulation Thickness (mils)	Conductor Jacket Thickness (mils)	Approx. Diameter Over Single Conductor (in.)	Grounding Conductor (AWG)	PVC Jacket Thickness (mils)	Approx. Diameter Overall (in.)	Approx. Net Weight (lb./1000')	Ampacity* (40°C ambient)
P15K2/3EG	2	7	220	80	1.04	6	110	2.50	3,058	165
P15K1/3EG	1	19	220	80	1.08	4	110	2.59	3,381	185
P15K1/03EG	1/0	19	220	80	1.13	4	110	2.70	3,779	215
P15K2/03EG	2/0	19	220	80	1.18	4	140	2.86	4,385	245
P15K4/03EG	4/0	19	220	80	1.26	3	140	3.04	5,389	320
P15K250/3EG	250	37	220	80	1.34	3	140	3.21	6,090	350
P15K350/3EG	350	37	220	80	1.44	2	140	3.42	7,433	430
P15K500/3EG	500	37	220	80	1.57	1	140	3.70	9,393	525
P15K750/3EG	750	61	220	110	1.82	1/0	140	4.24	13,020	635

**Per NEC Table 310.60 (C)(75). Based on one three-conductor cable. NOTE: The data shown is approximate and subject to standard industry tolerances.*

servicewire.com

Phoenix, AZ
877-623-9473

Culloden, WV
800-624-3572

Houston, TX
800-231-9473

SERVICEDRIVE® SYSTEM SELECTION GUIDE

Tray Cable

Corresponding HP and Part Numbers

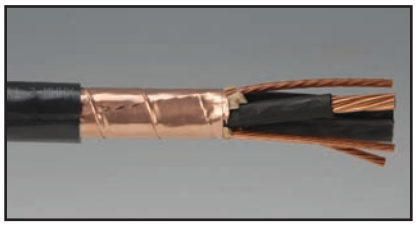

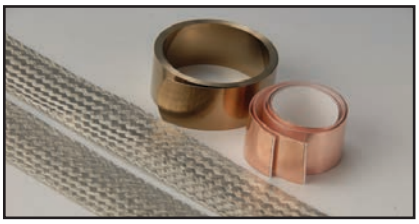

2,000 Volt Copper

CABLE Part Number	CONNECTOR Part Number	TERMINATION KIT Part Number	Size (AWG or Kcmil)	230V 3ø	460V 3ø	575V 3ø
VFD2KTCP14/3	CONASDTC2K14/3	TERASD14-1/3	14	5 HP	10 HP	10 HP
VFD2KTCP12/3	CONASDTC2K12/3	TERASD14-1/3	12	5 HP	10 HP	15 HP
VFD2KTCP10/3	CONASDTC2K10/3	TERASD14-1/3	10	10 HP	20 HP	25 HP
VFD2KTCP8/3	CONASDTC2K8/3	TERASD14-1/3	8	10 HP	30 HP	30 HP
VFD2KTCP6/3	CONASDTC2K6/3	TERASD14-1/3	6	15 HP	40 HP	50 HP
VFD2KTCP4/3	CONASDTC2K4/3	TERASD14-1/3	4	25 HP	50 HP	60 HP
VFD2KTCP3/3	CONASTCD2K3/3	TERASD14-1/3	3	30 HP	60 HP	75 HP
VFD2KTCP2/3	CONASDTC2K2/3	TERASD14-1/3	2	30 HP	60 HP	75 HP
VFD2KTCP1/3	CONASDTC2K1/3	TERASD14-1/3	1	40 HP	75 HP	100 HP
VFD2KTCP1/03	CONASDTC2K1/03	TERASD1/0-3/03	1/0	40 HP	75 HP	100 HP
VFD2KTCP2/03	CONASDTC2K2/03	TERASD1/0-3/03	2/0	50 HP	100 HP	125 HP
VFD2KTCP3/03	CONASDTC2K3/03	TERASD1/0-3/03	3/0	60 HP	125 HP	150 HP
VFD2KTCP4/03	CONASDTC2K4/03	TERASD4/0-400/3	4/0	60 HP	150 HP	150 HP
VFD2KTCP250/3	CONASDTC2K250/3	TERASD4/0-400/3	250	75 HP	150 HP	200 HP
VFD2KTCP350/3	CONASDTC2K350/3	TERASD4/0-400/3	350	100 HP	200 HP	250 HP
VFD2KTCP500/3	CONASDTC2K500/3	TERASD500-750/3	500	100 HP	250 HP	300 HP
VFD2KTCP600/3	CONASDTC2K600/3	TERASD500-750/3	600	125 HP	250 HP	350 HP
VFD2KTCP750/3	CONASDTC2K750/3	TERASD500-750/3	750	150 HP	300 HP	350 HP

Values based on typical Full-Load Current (FLC) ratings of three-phase AC motors as published in NEC Table 430.250 multiplied by 125% per NED Article 430.22 (A). The ampacity ratings of the cables are based on NEC Table 310.15 (B)(16) for 75° rated conductors. The VFD w/ signal ampacity values were de-rated to 80% per NEC Table 310.15 (B)(3)(a) due to the increased number of current-carrying conductors included in these cable(s).

Consult the drive/motor manufacturer for exact FLC ratings as well as any temperature de-ratings that may apply. NEC ampacity interpretations are subject to user's local authority having jurisdiction.

servicewire.com

Phoenix, AZ
877-623-9473

Culloden, WV
800-624-3572

Houston, TX
800-231-9473

SERVICEDRIVE®

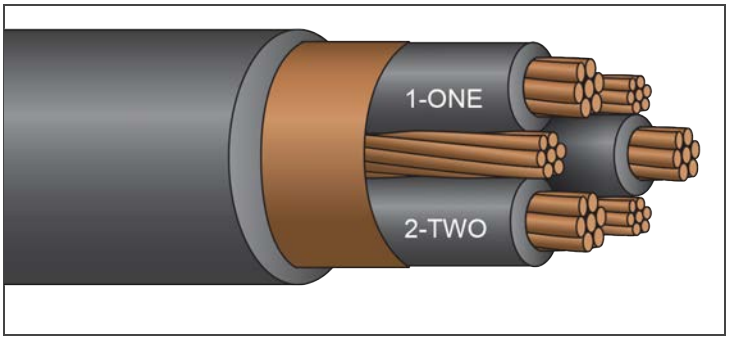

VFD CABLE (TRAY)

RHW-2/PVC, Shielded

2,000 Volt Copper

**Patented for use with ServiceDrive® connector and termination kit.*

Description:

3 conductors, stranded, insulated with heat and moisture resistant crosslinked polyethylene *(type RHW-2)*, phase identified and cabled with suitable fillers and 3 symmetrical bare copper ground conductors. Cable core covered with 5-mil helical copper tape shield, and overall black PVC jacket. ***Available with CPE or EnviroPlus® (LSZH) jacket. Available with tinned conductors and 50% grounds*.***

Application:

For use in ASD/VFD applications.

Suitable for use in hazardous locations: Class I - Div 2, Class II - Div 2, Class III - Div 1 and 2

Standards:

UL 1277
ICEA S-95-658/NEMA WC-70
Exposed Runs Rated *(TC-ER) (#4 AWG and larger)*
Flame Rated: IEEE 383 *(70,000 BTU)*, IEEE 1202/CSA FT-4, ICEA T-29-520 *(210,000 BTU) (1/0 AWG and larger)*, Two-hour Firewall
Temperature Rated at 90°C Wet/Dry
Sunlight and Oil Resistant II Jacket
Direct Burial
Color Code: Black and Numbered
RoHS Compliant

Part Number	Size (AWG or Kcmil)	Strand (no.)	Insulation Thickness (mils)	Grounding Conductors (AWG)	Jacket Thickness (mils)	Approx. Diameter Overall (in.)	Approx. Net Weight (lb./1000')	Ampacity** (30°C ambient) 90°C Wet/Dry
VFD2KTCP14/3	14	7	60	3-#14	60	0.55	218	25
VFD2KTCP12/3	12	7	60	3-#14	60	0.59	258	30
VFD2KTCP10/3	10	7	60	3-#14	60	0.64	311	40
VFD2KTCP8/3	8	7	80	3-#14	60	0.79	444	55
VFD2KTCP6/3	6	7	85	3-#12	80	0.93	654	75
VFD2KTCP4/3	4	7	85	3-#12	80	1.04	861	95
VFD2KTCP3/3	3	7	85	3-#10	80	1.09	1,026	115
VFD2KTCP2/3	2	7	85	3-#10	80	1.15	1,197	130
VFD2KTCP1/3	1	19	105	3-#10	80	1.31	1,482	145
VFD2KTCP1/03	1/0	19	105	3-#10	80	1.40	1,749	170
VFD2KTCP2/03	2/0	19	105	3-#10	80	1.49	2,077	195
VFD2KTCP3/03	3/0	19	105	3-#8	80	1.60	2,534	225
VFD2KTCP4/03	4/0	19	105	3-#8	110	1.78	3,142	260
VFD2KTCP250/3	250	37	120	3-#8	110	1.92	3,614	290
VFD2KTCP350/3	350	37	120	3-#6	110	2.13	4,822	350
VFD2KTCP500/3	500	37	120	3-#6	110	2.40	6,474	430
VFD2KTCP600/3	600	61	135	3-#6	110	2.63	7,659	475
VFD2KTCP750/3	750	61	135	3-#4	140	2.90	9,577	535

***Per NEC Table 310.15 (B)(16). NOTE: The data shown is approximate and subject to standard industry tolerances.*

servicewire.com

Phoenix, AZ
877-623-9473

Culloden, WV
800-624-3572

Houston, TX
800-231-9473

SERVICEDRIVE®

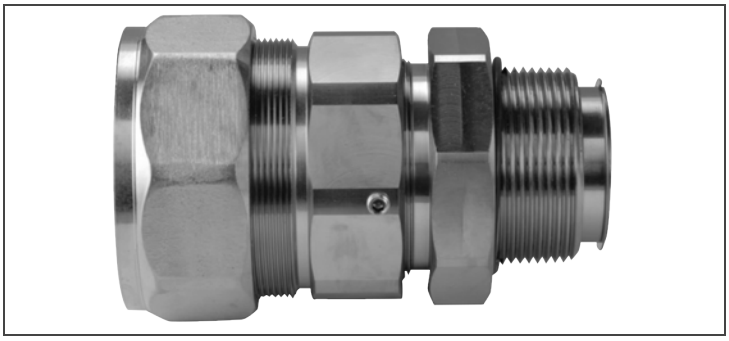

VFD CONNECTOR (TRAY)

2,000 Volt Copper

Patented for use with ServiceDrive®/ServiceDrive Plus® Cable Systems

Description:

Patented connectors are designed exclusively to terminate ASD/VFD cables in control centers, panel boards, junction boxes and motor control enclosures.

Standards:

Class I - Div 2, Class II - Div 1 and 2
NEMA 4
IP65
Thread Type: NPT

Part Number	3 Conductor Wire Size (AWG or Kcmil)	Hub Size	Set Screw Size
CONASDTC2K14/3	14	3/4”	10/32 x 1/4”
CONASDTC2K12/3	12	3/4”	10/32 x 1/4”
CONASDTC2K10/3	10	3/4”	10/32 x 1/4”
CONASDTC2K8/3	8	3/4”	10/32 x 1/4”
CONASDTC2K6/3	6	1 ”	1/4-20 x 1/4”
CONASDTC2K4/3	4	1-1/4”	1/4-20 x 1/4”
CONASDTC2K3/3	3	1-1/4”	1/4-20 x 1/4”
CONASDTC2K2/3	2	1-1/4”	1/4-20 x 1/4”
CONASDTC2K1/3	1	1-1/2”	1/4-20 x 1/4”
CONASDTC2K1/03	1/0	1-1/2”	1/4-20 x 1/4”
CONASDTC2K2/03	2/0	1-1/2”	1/4-20 x 5/16”
CONASDTC2K3/03	3/0	1-1/2”	1/4-20 x 5/16”
CONASDTC2K4/03	4/0	2”	1/4-20 x 5/16”
CONASDTC2K250/3	250	2”	5/16-18 x 3/8”
CONASDTC2K300/3	300	2”	5/16-18 x 3/8”
CONASDTC2K350/3	350	2”	5/16-18 x 3/8”
CONASDTC2K400/3	400	2-1/2”	5/16-18 x 3/8”
CONASDTC2K500/3	500	2-1/2”	5/16-18 x 3/8”
CONASDTC2K600/3	600	3”	5/16-18 x 3/8”
CONASDTC2K750/3	750	3”	5/16-18 x 3/8”

servicewire.com

Phoenix, AZ
877-623-9473

Culloden, WV
800-624-3572

Houston, TX
800-231-9473

SERVICEDRIVE®

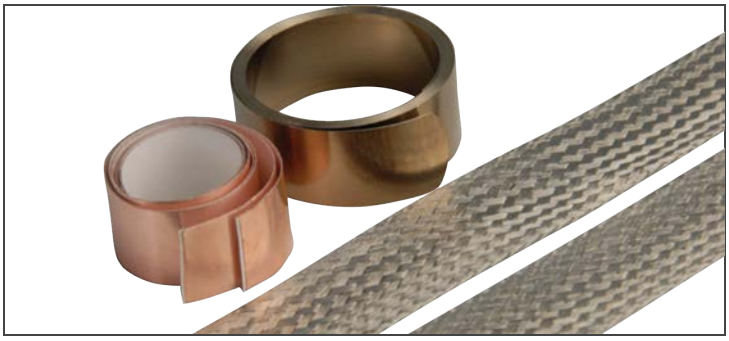

VFD CABLE TERMINATION KIT

600/1000/2000 Volt Copper, Tray or MC

Patented for use with ServiceDrive® VFD Cable Systems

Description:

Flat tinned copper braid with woven tinned copper construction, stainless steel spring clamp and adhesive-backed copper foil tape *(shields against EMI/RFI radiation)*, which is conductive through the adhesive.

Application:

Used to properly terminate the helically applied copper tape shield of VFD cable constructions.

Standards:

ASTM Standards: B-33 *(tinned soft or annealed)*
Braid: QC-W-343 Type S
Copper Foil Tape: UL 510 for Flame Retardancy

Part Number	Description
TERASD14-1/3	For use with #14 AWG - #1 AWG shielded armor and tray cable
TERASD1/0-3/03	For use with 1/0 AWG - 3/0 AWG shielded armor and tray cable
TERASD4/0-400/3	For use with 4/0 AWG - 400 Kcmil shielded armor and tray cable
TERASD500-750/3	For use with 500 Kcmil - 750 Kcmil shielded armor and tray cable

servicewire.com

Phoenix, AZ
877-623-9473

Culloden, WV
800-624-3572

Houston, TX
800-231-9473

SERVICEDRIVE® SYSTEM SELECTION GUIDE

Armored Cable

Corresponding HP and Part Numbers

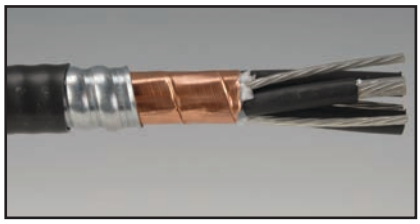

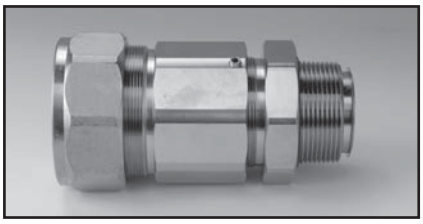

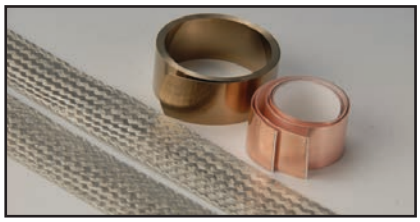

600 Volt Copper

CABLE Part Number	CONNECTOR Part Number	TERMINATION KIT Part Number	Size (AWG or Kcmil)	230V 3ø	460V 3ø	575V 3ø
VFDAP14/3	CONASD14/3	TERASD14-1/3	14	5 HP	10 HP	10 HP
VFDAP12/3	CONASD12/3	TERASD14-1/3	12	5 HP	10 HP	15 HP
VFDAP10/3	CONASD10/3	TERASD14-1/3	10	10 HP	20 HP	25 HP
VFDAP8/3	CONASD8/3	TERASD14-1/3	8	10 HP	30 HP	30 HP
VFDAP6/3	CONASD6/3	TERASD14-1/3	6	15 HP	40 HP	50 HP
VFDAP4/3	CONASD4/3	TERASD14-1/3	4	25 HP	50 HP	60 HP
VFDAP3/3	CONASD3/3	TERASD14-1/3	3	30 HP	60 HP	75 HP
VFDAP2/3	CONASD2/3	TERASD14-1/3	2	30 HP	60 HP	75 HP
VFDAP1/3	CONASD1/3	TERASD14-1/3	1	40 HP	75 HP	100 HP
VFDAP1/03	CONASD1/03	TERASD1/0-3/03	1/0	40 HP	75 HP	100 HP
VFDAP2/03	CONASD2/03	TERASD1/0-3/03	2/0	50 HP	100 HP	125 HP
VFDAP3/03	CONASD3/03	TERASD1/0-3/03	3/0	60 HP	125 HP	150 HP
VFDAP4/03	CONASD4/03	TERASD4/0-400/3	4/0	60 HP	150 HP	150 HP
VFDAP250/3	CONASD250/3	TERASD4/0-400/3	250	75 HP	150 HP	200 HP
VFDAP350/3	CONASD350/3	TERASD4/0-400/3	350	100 HP	200 HP	250 HP
VFDAP500/3	CONASD500/3	TERASD500-750/3	500	100 HP	250 HP	300 HP
VFDAP600/3	CONASD600/3	TERASD500-750/3	600	125 HP	250 HP	350 HP
VFDAP750/3	CONASD750/3	TERASD500-750/3	750	150 HP	300 HP	350 HP

SERVICEDRIVE®

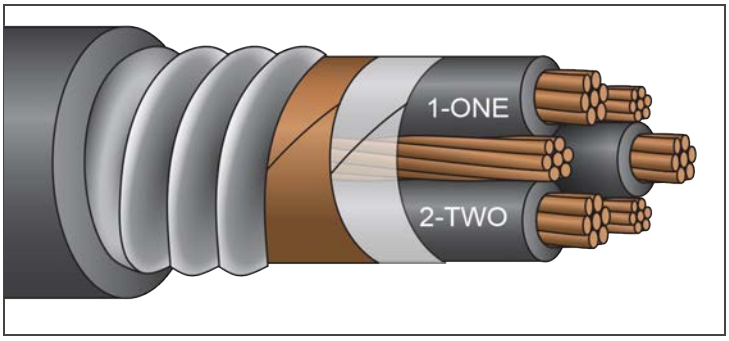

VFD CABLE (JACKETED MC)

XHHW-2/PVC

600 Volt Copper

**Patented for use with ServiceDrive® connector and termination kit.*

Description:

3 conductors, stranded, insulated with heat and moisture resistant crosslinked polyethylene *(type XHHW-2)*, phase identified and cabled with suitable fillers and 3 symmetrical copper ground conductors. Cable core covered with binder tape, 5-mil helical copper tape shield and aluminum interlocked armor with overall PVC jacket. ***Available in 1kV or 2kV and CPE or EnviroPlus® (LSZH) jacket. Available with galvanized steel interlocked armor, tinned conductors and 50% grounds*.***

Application:

For use in ASD/VFD applications.

Suitable for use in hazardous locations: Class I - Div 2, Class II - Div 2, Class III - Div 1 and 2

Standards:

UL 1569
ICEA S-95-658/NEMA WC-70
Flame Rated: IEEE 383 *(70,000 BTU)*, ICEA T-29-520 *(210,000 BTU)*, IEEE 1202/CSA FT-4, Two-hour Firewall
Temperature Rated at 90°C Wet/Dry
Cold Temperature Rated at -25°C
Sunlight and Oil Resistant II
Jacket Direct Burial *(includes encasement in concrete)*
Color Code: Method 4
RoHS Compliant

Part Number	Size (AWG or Kcmil)	Strand (no.)	Insulation Thickness (mils)	Grounding Conductors (AWG)	Diameter over Armor (in.)	PVC Jacket Thickness (mils)	Approx. Diameter Overall (in.)	Approx. Net Weight (lb./1000')	Ampacity** (30°C ambient) 90°C Wet/Dry
VFDAP14/3	14†	7	45	3-#14	0.57	50	0.67	332	25
VFDAP12/3	12†	7	45	3-#14	0.63	50	0.73	389	30
VFDAP10/3	10†	7	45	3-#14	0.67	50	0.77	449	40
VFDAP8/3	8†	7	45	3-#14	0.73	50	0.83	545	55
VFDAP6/3	6	7	45	3-#12	0.81	50	0.91	710	75
VFDAP4/3	4	7	45	3-#10	0.91	50	1.01	957	95
VFDAP3/3	3	7	45	3-#10	0.97	50	1.07	1,096	115
VFDAP2/3	2	7	45	3-#10	1.03	50	1.13	1,265	130
VFDAP1/3	1	19	55	3-#10	1.15	50	1.25	1,514	145
VFDAP1/03	1/0	19	55	3-#10	1.31	50	1.41	1,901	170
VFDAP2/03	2/0	19	55	3-#10	1.41	50	1.51	2,237	195
VFDAP3/03	3/0	19	55	3-#8	1.51	60	1.63	2,732	225
VFDAP4/03	4/0	19	55	3-#8	1.63	60	1.75	3,244	260
VFDAP250/3	250	37	65	3-#8	1.75	60	1.87	3,793	290
VFDAP350/3	350	37	65	3-#6	1.97	60	2.09	5,028	350
VFDAP500/3	500	37	65	3-#6	2.25	60	2.37	6,712	430
VFDAP600/3	600	61	80	3-#6	2.45	75	2.60	7,981	475
VFDAP750/3	750	61	80	3-#4	2.69	75	2.84	9,775	535
VFDAP1000/3	1000	61	80	3-#2	3.13	85	3.30	12,243	615

†UL Listed Only
***Per NEC Table 310.15 (B)(16). NOTE: The data shown is approximate and subject to standard industry tolerances.*

servicewire.com

Phoenix, AZ
877-623-9473

Culloden, WV
800-624-3572

Houston, TX
800-231-9473

SERVICEDRIVE®

VFD CONNECTOR (MC)

600 Volt Copper

Patented for use with ServiceDrive® VFD Cable Systems

Description:

Patented connectors are designed exclusively to terminate VFD cables in control centers, panel boards, junction boxes and motor control enclosures. ***1kV and 2kV connectors available.***

Standards:

Class I - Div 2, Class II - Div 1 and 2
NEMA 4
IP65
Thread Type: NPT

Part Number	3 Conductor Wire Size (AWG or Kcmil)	Hub Size	Set Screw Size
CONASD14/3	14	3/4”	10/32 x 1/4”
CONASD12/3	12	3/4”	10/32 x 1/4”
CONASD10/3	10	3/4”	10/32 x 1/4”
CONASD8/3	8	3/4”	10/32 x 1/4”
CONASD6/3	6	1-1/4”	1/4-20 x 1/4”
CONASD4/3	4	1-1/4”	1/4-20 x 1/4”
CONASD3/3	3	1-1/4”	1/4-20 x 1/4”
CONASD2/3	2	1-1/4”	1/4-20 x 1/4”
CONASD1/3	1	1-1/4”	1/4-20 x 1/4”
CONASD1/03	1/0	1-1/2”	1/4-20 x 1/4”
CONASD2/03	2/0	1-1/2”	1/4-20 x 1/4”
CONASD3/03	3/0	1-1/2”	1/4-20 x 1/4”
CONASD4/03	4/0	2”	1/4-20 x 5/16”
CONASD250/3	250	2”	1/4-20 x 5/16”
CONASD300/3	300	2”	1/4-20 x 5/16”
CONASD350/3	350	2-1/2”	5/16-18 x 3/8”
CONASD400/3	400	2-1/2”	5/16-18 x 3/8”
CONASD500/3	500	2-1/2”	5/16-18 x 3/8”
CONASD600/3	600	3”	5/16-18 x 3/8”
CONASD750/3	750	3”	5/16-18 x 3/8”

servicewire.com

Phoenix, AZ
877-623-9473

Culloden, WV
800-624-3572

Houston, TX
800-231-9473

SERVICEDRIVE®

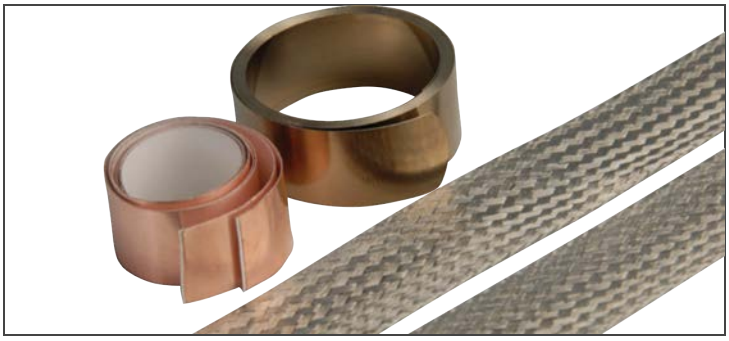

VFD CABLE TERMINATION KIT

600/1000/2000 Volt Copper, Tray or MC

Patented for use with ServiceDrive® VFD Cable Systems

Description:

Flat tinned copper braid with woven tinned copper construction, stainless steel spring clamp and adhesive-backed copper foil tape *(shields against EMI/RFI radiation)*, which is conductive through the adhesive.

Application:

Used to properly terminate the helically applied copper tape shield of VFD cable constructions.

Standards:

ASTM Standards: B-33 *(tinned soft or annealed)*
Braid: QC-W-343 Type S
Copper Foil Tape: UL 510 for Flame Retardancy

Part Number	Description
TERASD14-1/3	For use with #14 AWG - #1 AWG shielded armor and tray cable
TERASD1/0-3/03	For use with 1/0 AWG - 3/0 AWG shielded armor and tray cable
TERASD4/0-400/3	For use with 4/0 AWG - 400 Kcmil shielded armor and tray cable
TERASD500-750/3	For use with 500 Kcmil - 750 Kcmil shielded armor and tray cable

servicewire.com

Phoenix, AZ
877-623-9473

Culloden, WV
800-624-3572

Houston, TX
800-231-9473

ARMORED CABLE

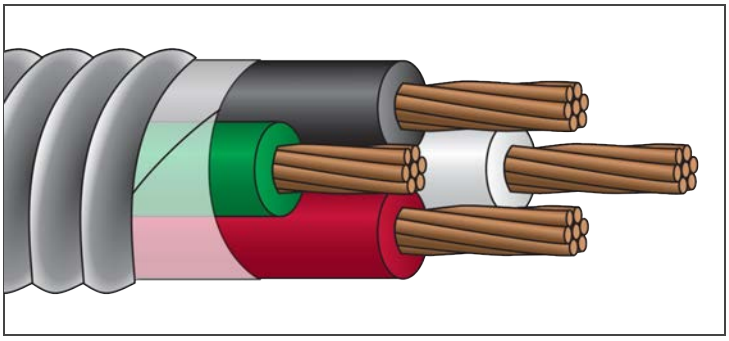

FEEDER MC or AC90

XHHW-2 or RW90

600 Volt Copper

2 or 3 Conductor

Description:

2 or 3 conductors, stranded, insulated with heat and moisture resistant crosslinked polyethylene *(type XHHW-2 or RW90)*, phase identified and cabled with suitable fillers *(when required)* and green or bare ground conductor. Cable core covered with binder tape and aluminum or galvanized steel interlocked armor. ***Jacket available upon request.***

Application:

Cost effective replacement for conduit and wire; for service, branch and feeder circuits; and commercial, industrial & utility applications. For use in theatres *(article 520)*, motion picture and TV studios *(article 530)* and places of assembly with more than 100 people.

Suitable for use in hazardous locations: Class I - Div 2, Class II - Div 2

Standards:

UL 1569
ICEA S-95-658/NEMA WC-70
Cable Tray Rated
NEC Article 330 *(can be messenger supported)*
Flame Rated: Two-hour Firewall
Temperature Rated at 90°C Wet/Dry
Color Code: 120V - BK, WE, RD, GN Ground *(#8 AWG - #1 AWG),*
480V *(KZ)* - BN, GY, OE, GN Ground *(#8 AWG - #6 AWG),*
Method 4 - Bare Ground *(1/0 AWG and larger)*
RoHS Compliant

Part Number	Size (AWG or Kcmil)	Strand (no.)	Insulation Thickness (mils)	Insulated/Bare Grounding Conductor (AWG)	Diameter Over Armor (in.)	Approx. Net Weight *Aluminum Armor* (lb./1000')	Approx. Net Weight *Galvanized Armor* (lb./1000')	Ampacity* (30°C ambient) 90°C Wet/Dry
MC8/2	8	7	45	10	0.71	259	337	55
MC8/2KZ	8	7	45	10	0.71	259	337	55
MC6/2	6	7	45	8	0.81	366	465	75
MC6/2KZ	6	7	45	8	0.81	366	465	75
MC8/3	8	7	45	10	0.81	339	434	55
MC8/3KZ	8	7	45	10	0.81	339	434	55
MC6/3	6	7	45	8	0.95	480	607	75
MC6/3KZ	6	7	45	8	0.95	480	607	75
MC4/3	4	7	45	8	1.01	659	786	95
MC3/3	3	7	45	6	1.09	808	960	115
MC2/3	2	7	45	6	1.15	960	1,109	130
MC1/3	1	19	55	6	1.27	1,190	1,423	145
MC1/03	1/0	19	55	6	1.31	1,409	1,647	170
MC2/03	2/0	19	55	6	1.37	1,697	1,965	195
MC3/03	3/0	19	55	4	1.51	2,118	2,410	225
MC4/03	4/0	19	55	4	1.63	2,577	2,897	260
MC250/3	250	37	65	4	1.75	3,076	3,423	290
MC300/3	300	37	65	3	1.85	3,634	4,013	320
MC350/3	350	37	65	3	1.95	4,159	4,561	350
MC400/3	400	37	65	3	2.05	4,681	5,106	380
MC500/3	500	37	65	2	2.25	5,765	6,220	430
MC600/3	600	61	80	2	2.45	6,873	7,382	475
MC750/3	750	61	80	1	2.69	8,476	9,032	535
MC1000/3	1000	61	80	1/0	3.13	11,197	11,862	615

**Per NEC Table 310.15 (B)(16). NOTE: The data shown is approximate and subject to standard industry tolerances.*

ARMORED CABLE

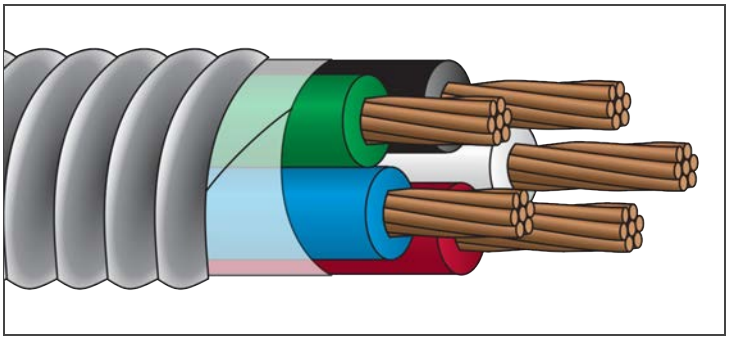

FEEDER MC or AC90

XHHW-2 or RW90

600 Volt Copper

4 Conductor

Description:

4 conductors, stranded, insulated with heat and moisture resistant crosslinked polyethylene *(type XHHW-2 or RW90)*, phase identified and cabled with suitable fillers *(when required)* and green or bare ground conductor. Cable core covered with binder tape and aluminum or galvanized steel interlocked armor. ***Jacket available upon request.***

Application:

Cost effective replacement for conduit and wire; for service, branch and feeder circuits; and commercial, industrial and utility applications. For use in theatres *(article 520)*, motion picture and TV studios *(article 530)* and places of assembly with more than 100 people.

Suitable for use in hazardous locations: Class I - Div 2, Class II - Div 2

Standards:

UL 1569
ICEA S-95-658/NEMA WC-70
Cable Tray Rated
NEC Article 330 *(can be messenger supported)*
Flame Rated: Two-hour Firewall
Temperature Rated at 90°C Wet/Dry
Color Code: 120V - BK, WE, RD, BE, GN Ground *(#8 AWG - #1 AWG),*
480V *(KZ)* - BN, GY, OE, YW, GN Ground *(#8 AWG - #1 AWG),*
Method 4 - Bare Ground *(1/0 AWG and larger)*
RoHS Compliant

Part Number	Size (AWG or Kcmil)	Strand (no.)	Insulation Thickness (mils)	Insulated/Bare Grounding Conductor (AWG)	Diameter Over Armor (in.)	Approx. Net Weight *Aluminum Armor* (lb./1000')	Approx. Net Weight *Galvanized Armor* (lb./1000')	Ampacity* (30°C ambient) 90°C Wet/Dry
MC8/4	8	7	45	10	0.89	416	517	55
MC8/4KZ	8	7	45	10	0.89	416	517	55
MC6/4	6	7	45	8	1.03	591	730	75
MC6/4KZ	6	7	45	8	1.03	591	730	75
MC4/4	4	7	45	8	1.11	823	968	95
MC3/4	3	7	45	6	1.23	1,010	1,172	115
MC2/4	2	7	45	6	1.33	1,237	1,491	130
MC1/4	1	19	55	6	1.43	1,507	1,783	145
MC1/04	1/0	19	55	6	1.43	1,805	2,078	170
MC2/04	2/0	19	55	6	1.51	2,189	2,489	195
MC3/04	3/0	19	55	4	1.65	2,725	3,049	225
MC4/04	4/0	19	55	4	1.79	3,333	3,698	260
MC250/4	250	37	65	4	1.91	3,967	4,360	290
MC300/4	300	37	65	3	2.05	4,698	5,115	320
MC350/4	350	37	65	3	2.17	5,392	5,844	350
MC400/4	400	37	65	3	2.27	6,078	6,545	380
MC500/4	500	37	65	2	2.45	7,486	8,003	430
MC600/4	600	61	80	2	2.71	8,950	9,519	475
MC750/4	750	61	80	1	2.97	11,047	11,667	535
MC1000/4	1000	61	80	1/0	3.49	14,612	15,352	615

**Per NEC Table 310.15 (B)(16). Four-conductor ampacity assumes three are hot and one is neutral. NOTE: The data shown is approximate and subject to standard industry tolerances.*

servicewire.com

Phoenix, AZ
877-623-9473

Culloden, WV
800-624-3572

Houston, TX
800-231-9473

ARMORED CABLE

FEEDER MC CONNECTOR

Description:
Connectors are a one-piece body construction with a unique scroll design that can provide a 360º ground to armor. Provides fast and easy installation, eliminates internal components, prevents cable pullout and saves time and labor.

Application:
Suitable for industrial and commercial use. Manufactured from 6061 copper-free aluminum. A complete range of NPT *(National Pipe Thread)* sizes are available from 1/2" through 4".

Standards:
UL: Class II and III — All Divisions

Copper MC	Part Number	O.D. Range	Copper MC	Part Number	O.D. Range	Copper MC	Part Number	O.D. Range
MC 8/3	CON83	0.760 - 0.830	MC 2/4	CON139	1.320 - 1.390	MC 250/4	CON202	1.930 - 2.020
MC 8/4	CON90	0.830 - 0.900	MC 1/3	CON132	1.250 - 1.320	MC 350/3	CON202	1.930 - 2.020
MC 6/2	CON83	0.760 - 0.830	MC 1/4	CON148	1.390 - 1.480	MC 350/4	CON224	2.130 - 2.240
MC 6/3	CON97	0.900 - 0.970	MC 1/03	CON132	1.250 - 1.320	MC 400/3	CON213	2.020 - 2.130
MC 6/4	CON104	0.970 - 1.040	MC 1/04	CON148	1.390 - 1.480	MC 400/4	CON235	2.240 - 2.350
MC 4/2	CON90	0.830 - 0.900	MC 2/03	CON148	1.390 - 1.480	MC 500/3	CON235	2.240 - 2.350
MC 4/3	CON104	0.970 - 1.040	MC 2/04	CON157	1.480 - 1.570	MC 500/4	CON257	1.480 - 2.570
MC 4/4	CON118	1.110 - 1.180	MC 3/03	CON157	1.480 - 1.570	MC 600/3	CON246	2.350 - 2.460
MC 3/3	CON111	1.040 - 1.110	MC 3/04	CON175	1.660 - 1.750	MC 600/4	CON285	2.740 - 2.850
MC 3/4	CON125	1.180 - 1.250	MC 4/03	CON166	1.570 - 1.660	MC 750/3	CON271	2.570 - 2.710
MC 2/3	CON118	1.110 - 1.180	MC 4/04	CON184	1.750 - 1.840	MC 750/4	CON299	2.850 - 2.999
			MC 250/3	CON184	1.750 - 1.840			

Service Wire Co.
Manufacturing quality. Delivering service.

ARMORED CABLE

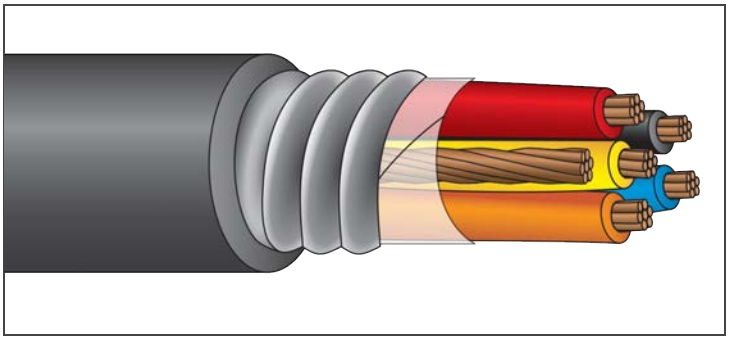

JACKETED MC

XHHW-2

600 Volt Copper

Description:

Class B stranded copper, insulated with heat and moisture resistant crosslinked polyethylene *(type XHHW-2)*, phase identified and cabled with a **bare copper ground conductor. Cable core covered with binder tape and aluminum or galvanized steel interlocked armor, with an overall PVC jacket.

Jacket available in colors.

***Cable with seven conductors or more will have a green insulated ground.*

Application:

Suitable for use in hazardous locations: Class I - Div 2, Class II - Div 2

Standards:

UL 1569, ICEA S-95-658/NEMA WC-70
Flame Rated: CT Use, IEEE 383 *(70,000 BTU)*, ICEA T-29-520 *(210,000 BTU)*, IEEE 1202/CSA FT-4, Two-hour Firewall
Temperature Rated at 90°C Wet/Dry
Sunlight and Oil Resistant II Jacket
Direct Burial *(includes encasement in concrete)*
Color Code: K-2 *(other color codes available)*
RoHS Compliant

Part Number	Number of Conductors	Grounding Conductor (AWG)	Diameter Over Armor (in.)	PVC Jacket Thickness (mils)	Approx. Overall Diameter (in.)	Approx. Net Weight *Aluminum Armor* (lb./1000')	Approx. Net Weight *Galvanized Armor* (lb./1000')	Ampacity* (30°C ambient) 90° Wet/Dry
AAP14/2	2	14	0.55	50	0.65	172	235	25†
AAP14/3	3	14	0.55	50	0.65	190	254	25†
AAP14/4	4	14	0.55	50	0.65	208	272	20†
AAP14/5	5	14	0.59	50	0.69	237	298	20†
AAP14/7	7	14	0.67	50	0.77	299	373	17†
AAP14/9	9	14	0.75	50	0.85	356	443	17†
AAP14/12	12	14	0.79	50	0.89	420	521	12
AAP14/19	19	14	0.91	50	1.01	577	689	12
AAP14/25	25	14	0.99	50	1.09	706	839	11
AAP14/37	37	14	1.23	50	1.33	974	1,121	10
AAP12/2	2	12	0.55	50	0.65	198	261	30†
AAP12/3	3	12	0.55	50	0.65	225	288	30†
AAP12/4	4	12	0.59	50	0.69	262	323	24†
AAP12/5	5	12	0.63	50	0.73	299	375	24†
AAP12/7	7	12	0.73	50	0.83	385	468	21†
AAP12/9	9	12	0.81	50	0.91	459	564	21†
AAP12/12	12	12	0.87	50	0.97	555	669	15
AAP12/19	19	12	0.99	50	1.09	773	907	15
AAP12/25	25	12	1.11	50	1.21	965	1,109	13
AAP12/37	37	12	1.37	50	1.47	1,369	1,627	12
AAP10/2	2	10	0.57	50	0.67	241	307	40†
AAP10/3	3	10	0.61	50	0.71	291	355	40†
AAP10/4	4	10	0.65	50	0.75	341	412	32†
AAP10/5	5	10	0.69	50	0.79	391	477	32†
AAP10/7	7	10	0.81	50	0.91	509	605	28
AAP10/9	9	10	0.91	50	1.01	614	726	28
AAP10/12	12	10	0.97	50	1.07	749	879	20
AAP10/19	19	10	1.11	50	1.21	1,063	1,215	20
AAP10/25	25	10	1.31	50	1.41	1,367	1,600	18
AAP10/37	37	10	1.51	60	1.63	1,929	2,229	16

**Per NEC Table 310.15 (B)(16) (Ampacity derated in accordance with note 8a). †The overcurrent protection for items marked with an obelisk (†) shall not exceed 15 amps for #14 AWG, 20 amps for #12 AWG, and 30 amps for #10 AWG per NEC 310-16 footnote. NOTE: The data shown is approximate and subject to standard industry tolerances.*

servicewire.com

Phoenix, AZ
877-623-9473

Culloden, WV
800-624-3572

Houston, TX
800-231-9473

ARMORED CABLE

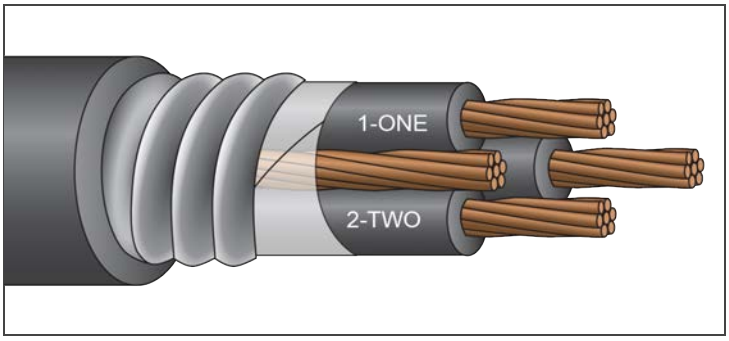

JACKETED MC

XHHW-2

600 Volt Copper

3 Conductor

Description:

3 conductors, stranded, insulated with heat and moisture resistant crosslinked polyethylene *(type XHHW-2)*, phase identified and cabled with suitable fillers *(when necessary)* and bare copper ground conductor. Cable core covered with binder tape and aluminum or galvanized steel interlocked armor, with black PVC jacket. ***Jacket available in colors.***

Application:

Suitable for use in hazardous locations: Class I - Div 2, Class II - Div 2

Standards:

UL 1569
ICEA S-95-658/NEMA WC-70
Flame Rated: CT Use, IEEE 383 *(70,000 BTU),* ICEA T-29-520 *(210,000 BTU),* IEEE 1202/CSA FT-4, Two-hour Firewall
Temperature Rated at 90°C Wet/Dry
Sunlight and Oil Resistant II Jacket
Direct Burial *(includes encasement in concrete)*
Color Code: Method 4 *(K2 on #8; other color codes available)*
RoHS Compliant

Part Number	Size (AWG or Kcmil)	Strand (no.)	Insulation Thickness (mils)	Grounding Conductor (AWG)	Diameter Over Armor (in.)	Jacket Thickness (mils)	Approx. Diameter Overall (in.)	Approx. Net Weight *Aluminum Armor* (lb./1000')	Approx. Net Weight *Galvanized Armor* (lb./1000')	Ampacity* (30°C ambient) 90°C Wet/Dry
AAP8/3	8	7	45	10	0.73	50	0.83	399	482	55
AAP6/3	6	7	45	8	0.81	50	0.91	540	636	75
AAP4/3	4	7	45	8	0.91	50	1.01	725	846	95
AAP3/3	3	7	45	6	0.97	50	1.07	881	1,002	115
AAP2/3	2	7	45	6	1.03	50	1.13	1,035	1,166	130
AAP1/3	1	19	55	6	1.15	50	1.25	1,254	1,404	145
AAP1/03	1/0	19	55	6	1.31	50	1.41	1,537	1,771	170
AAP2/03	2/0	19	55	6	1.37	50	1.47	1,831	2,099	195
AAP3/03	3/0	19	55	4	1.51	60	1.63	2,295	2,555	225
AAP4/03	4/0	19	55	4	1.63	60	1.75	2,768	3,085	260
AAP250/3	250	37	65	4	1.75	60	1.87	3,280	3,625	290
AAP300/3	300	37	65	3	1.85	60	1.97	3,849	4,228	320
AAP350/3	350	37	65	3	1.95	60	2.07	4,386	4,787	350
AAP400/3	400	37	65	3	2.05	60	2.17	4,919	5,344	380
AAP500/3	500	37	65	2	2.25	60	2.37	6,026	6,476	430
AAP600/3	600	61	80	2	2.45	75	2.60	7,229	7,735	475
AAP750/3	750	61	80	1	2.69	75	2.84	8,866	9,416	535
AAP1000/3	1000	61	80	1/0	3.13	85	3.30	11,710	12,373	615

**Per NEC Table 310.15 (B)(16). Four-conductor ampacity assumes three are hot and one is neutral. NOTE: The data shown is approximate and subject to standard industry tolerances.*

ARMORED CABLE

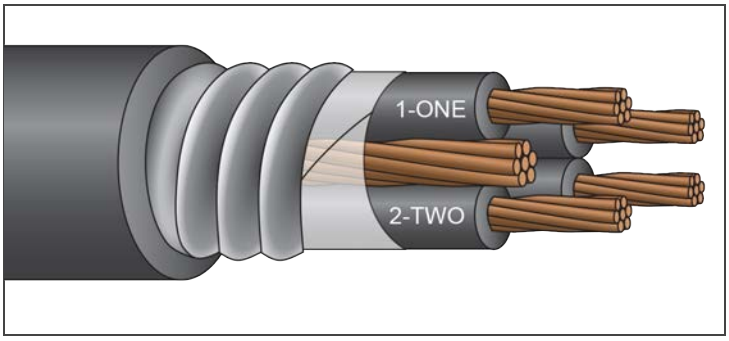

JACKETED MC

XHHW-2

600 Volt Copper

4 Conductor

Description:

4 conductors, stranded, insulated with heat and moisture resistant crosslinked polyethylene *(type XHHW-2)*, phase identified and cabled with suitable fillers *(when necessary)* and bare copper ground conductor. Cable core covered with binder tape and aluminum or galvanized steel interlocked armor, with black PVC jacket. ***Jacket available in colors.***

Application:

Suitable for use in hazardous locations: Class I - Div 2, Class II - Div 2

Standards:

UL 1569
ICEA S-95-658/NEMA WC-70
Flame Rated: CT Use, IEEE 383 *(70,000 BTU),* ICEA T-29-520 *(210,000 BTU),* IEEE 1202/CSA FT-4, Two-hour Firewall
Temperature Rated at 90°C Wet/Dry
Sunlight and Oil Resistant II Jacket
Direct Burial *(includes encasement in concrete)*
Color Code: Method 4 *(K2 on #8; other color codes available)*
RoHS Compliant

Part Number	Size (AWG or Kcmil)	Strand (no.)	Insulation Thickness (mils)	Grounding Conductor (AWG)	Diameter Over Armor (in.)	Jacket Thickness (mils)	Approx. Diameter Overall (in.)	Approx. Net Weight *Aluminum Armor* (lb./1000')	Approx. Net Weight *Galvanized Armor* (lb./1000')	Ampacity* (30°C ambient) 90°C Wet/Dry
AAP8/4	8	7	45	10	0.79	50	0.89	480	573	55
AAP6/4	6	7	45	8	0.87	50	0.97	655	769	75
AAP4/4	4	7	45	8	0.99	50	1.09	898	1,031	95
AAP3/4	3	7	45	6	1.05	50	1.15	1,080	1,233	115
AAP2/4	2	7	45	6	1.13	50	1.23	1,295	1,442	130
AAP1/4	1	19	55	6	1.33	50	1.43	1,613	1,861	145
AAP1/04	1/0	19	55	6	1.43	50	1.53	1,944	2,215	170
AAP2/04	2/0	19	55	6	1.51	60	1.63	2,366	2,666	195
AAP3/04	3/0	19	55	4	1.65	60	1.77	2,918	3,240	225
AAP4/04	4/0	19	55	4	1.79	60	1.91	3,542	3,906	260
AAP250/4	250	37	65	4	1.91	60	2.03	4,190	4,582	290
AAP300/4	300	37	65	3	2.05	60	2.17	4,936	5,351	320
AAP350/4	350	37	65	3	2.17	60	2.29	5,643	6,096	350
AAP400/4	400	37	65	3	2.27	75	2.42	6,408	6,805	380
AAP500/4	500	37	65	2	2.45	75	2.60	7,842	8,359	430
AAP600/4	600	61	80	2	2.71	75	2.86	9,343	9,909	475
AAP750/4	750	61	80	1	2.97	75	3.12	11,476	12,091	535
AAP1000/4	1000	61	80	1/0	3/49	85	3.66	15,183	15,917	615

**Per NEC Table 310.15 (B)(16). Four-conductor ampacity assumes three are hot and one is neutral. NOTE: The data shown is approximate and subject to standard industry tolerances.*

servicewire.com

Phoenix, AZ
877-623-9473

Culloden, WV
800-624-3572

Houston, TX
800-231-9473

ARMORED CABLE

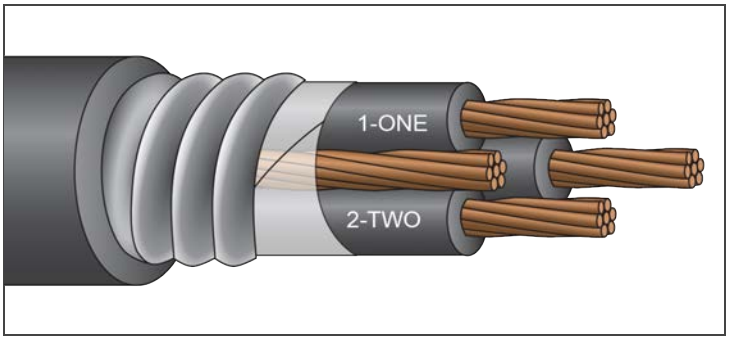

JACKETED MC

XHHW-2, 50% Ground

600 Volt Copper

3 Conductor

ISO 9001: 2015 RoHS COMPLIANT Made in the USA REACH

Description:

3 conductors, stranded, insulated with heat and moisture resistant crosslinked polyethylene *(type XHHW-2)*, phase identified and cabled with suitable fillers *(when necessary)* and bare copper ground conductor *(3 segmented grounds)*. Cable core covered with binder tape and aluminum or galvanized steel interlocked armor, with black PVC jacket. ***Jacket available in colors.***

Application:

Suitable for use in hazardous locations: Class I - Div 2, Class II - Div 2

Standards:

UL 1569
ICEA S-95-658/NEMA WC-70
Flame Rated: CT Use, IEEE 383 *(70,000 BTU),* ICEA T-29-520 *(210,000 BTU),* IEEE 1202/CSA FT-4, Two-hour Firewall
Temperature Rated at 90°C Wet/Dry
Sunlight and Oil Resistant II Jacket
Direct Burial *(includes encasement in concrete)*
Color Code: Method 4 *(K2 on #8; other color codes available)*
RoHS Compliant

Part Number	Size (AWG or Kcmil)	Strand (no.)	Insulation Thickness (mils)	Grounding Conductors (AWG)	Diameter Over Armor (in.)	PVC Jacket Thickness (mils)	Approx. Diameter Overall (in.)	Approx. Net Weight *Aluminum Armor* (lb./1000')	Approx. Net Weight *Galvanized Armor* (lb/1000')	Ampacity* (30°C ambient) 90°C Wet/Dry
AAP8/3G3#14	8	7	45	3-#14	0.73	50	0.83	405	489	55
AAP6/3G3#12	6	7	45	3-#12	0.81	50	0.91	550	646	75
AAP4/3G3#10	4	7	45	3-#10	0.91	50	1.01	771	892	95
AAP3/3G3#10	3	7	45	3-#10	0.97	50	1.07	896	1,018	115
AAP2/3G3#8	2	7	45	3-#8	1.03	50	1.13	1,107	1,238	130
AAP1/3G3#8	1	19	55	3-#8	1.15	50	1.25	1,326	1,475	145
AAP1/03G3#6	1/0	19	55	3-#6	1.31	50	1.41	1,701	1,935	170
AAP2/03G3#6	2/0	19	55	3-#6	1.37	50	1.47	1,995	2,262	195
AAP3/03G3#4	3/0	19	55	3-#4	1.51	60	1.63	2,556	2,815	225
AAP4/03G3#4	4/0	19	55	3-#4	1.63	60	1.75	3,028	3,346	260
AAP250/3G3#4	250	37	65	3-#4	1.75	60	1.87	3,524	3,869	290
AAP300/3G3#3	300	37	65	3-#3	1.85	60	1.97	4,158	4,536	320
AAP350/3G3#2	350	37	65	3-#2	1.95	60	2.07	4,815	5,217	350
AAP400/3G3#2	400	37	65	3-#2	2.05	60	2.17	5,348	5,773	380
AAP500/3G3#1	500	37	65	3-#1	2.25	60	2.37	6,576	7,026	430
AAP600/3G3-1/0	600	61	80	3-1/0	2.45	75	2.60	7,973	8,479	475
AAP750/3G3-2/0	750	61	80	3-2/0	2.69	75	2.84	9,801	10,351	535
AAP1000/3G3-3/0	1000	61	80	3-3/0	3.13	85	3.30	12,890	13,552	615

**Per NEC Table 310.15 (B)(16). Four-conductor ampacity assumes three are hot and one is neutral. NOTE: The data shown is approximate and subject to standard industry tolerances.*

servicewire.com

Phoenix, AZ
877-623-9473

Culloden, WV
800-624-3572

Houston, TX
800-231-9473

ARMORED CABLE

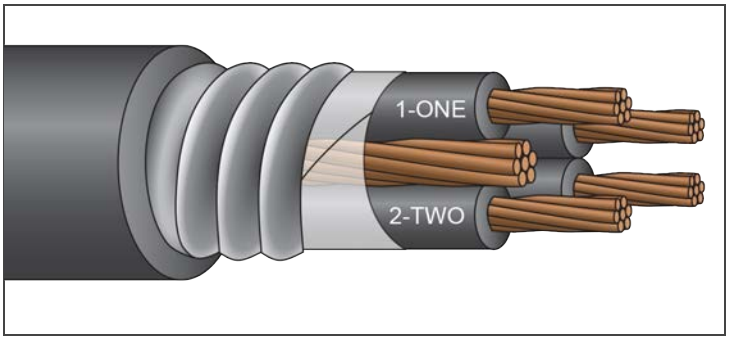

JACKETED MC

XHHW-2, 50% Ground

600 Volt Copper

4 Conductor

ISO 9001: 2015 RoHS COMPLIANT Made in the USA REACH

Description:

4 conductors, stranded, insulated with heat and moisture resistant crosslinked polyethylene *(type XHHW-2)*, phase identified and cabled with suitable fillers *(when necessary)* and bare copper ground conductor *(3 segmented grounds)*. Cable core covered with binder tape and aluminum or galvanized steel interlocked armor, with black PVC jacket. ***Jacket available in colors.***

Application:

Suitable for use in hazardous locations: Class I - Div 2, Class II - Div 2

Standards:

UL 1569
ICEA S-95-658/NEMA WC-70
Flame Rated: CT Use, IEEE 383 *(70,000 BTU),* ICEA T-29-520 *(210,000 BTU),* IEEE 1202/CSA FT-4, Two-hour Firewall
Temperature Rated at 90°C Wet/Dry
Sunlight and Oil Resistant II Jacket
Direct Burial *(includes encasement in concrete)*
Color Code: Method 4 *(K2 on #8; other color codes available)*
RoHS Compliant

Part Number	Size (AWG or Kcmil)	Strand (no.)	Insulation Thickness (mils)	Grounding Conductors (AWG)	Diameter Over Armor (in.)	PVC Jacket Thickness (mils)	Approx. Diameter Overall (in.)	Approx. Net Weight *Aluminum Armor* (lb./1000')	Approx. Net Weight *Galvanized Armor* (lb/1000')	Ampacity* (30°C ambient) 90°C Wet/Dry
AAP8/4G3#14	8	7	45	3-#14	0.79	50	0.89	485	579	55
AAP6/4G3#12	6	7	45	3-#12	0.87	50	0.97	666	778	75
AAP4/4G3#10	4	7	45	3-#10	0.99	50	1.09	944	1,077	95
AAP3/4G3#10	3	7	45	3-#10	1.05	50	1.15	1,105	1,248	115
AAP2/4G3#8	2	7	45	3-#8	1.13	50	1.23	1,368	1,515	130
AAP1/4G3#8	1	19	55	3-#8	1.33	50	1.43	1,685	1,933	145
AAP1/04G3#6	1/0	19	55	3-#6	1.43	50	1.53	2,108	2,379	170
AAP2/04G3#6	2/0	19	55	3-#6	1.51	60	1.63	2,529	2,829	195
AAP3/04G3#4	3/0	19	55	3-#4	1.65	60	1.77	3,178	3,500	225
AAP4/04G3#4	4/0	19	55	3-#4	1.79	60	1.91	3,882	4,167	260
AAP250/4G3#4	250	37	65	3-#4	1.91	60	2.03	4,434	4,826	290
AAP300/4G3#3	300	37	65	3-#3	2.05	60	2.17	5,245	5,659	320
AAP350/4G3#2	350	37	65	3-#2	2.17	60	2.29	6,073	6,525	350
AAP400/4G3#2	400	37	65	3-#2	2.27	75	2.42	6,838	7,235	380
AAP500/4G3#1	500	37	65	3-#1	2.45	75	2.60	8,392	8,909	430
AAP600/4G3-1/0	600	61	80	3-1/0	2.71	75	2.86	10,087	10,653	475
AAP750/4G3-2/0	750	61	80	3-2/0	2.97	75	3.12	12,411	13,026	535
AAP1000/4G3-3/0	1000	61	80	3-3/0	3.49	85	3.66	16,362	17,096	615

**Per NEC Table 310.15 (B)(16). Four-conductor ampacity assumes three are hot and one is neutral. NOTE: The data shown is approximate and subject to standard industry tolerances.*

servicewire.com

Phoenix, AZ
877-623-9473

Culloden, WV
800-624-3572

Houston, TX
800-231-9473

ARMORED CABLE

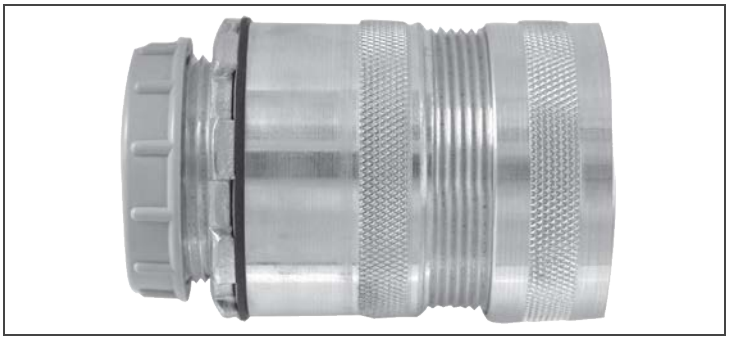

JACKETED MC CONNECTOR

Water Tight

Description:

Connectors are a one-piece body construction with a unique scroll design that can provide a 360° ground to armor. Provides fast and easy installation, eliminates internal components, prevents cable pullout and saves time and labor.

Application:

Suitable for industrial and commercial use. Manufactured from 6061 copper-free aluminum. A complete range of NPT *(National Pipe Thread)* sizes are available from 1/2" through 4". This accommodates armored cable type MC O.D. sizes from 0.38 - 4.33".

Standards:

UL: Class II and III — All Divisions

Copper AIA-PVC	Part Number	O.D. Range
AAP 14/2	CONW62	0.560 - 0.620
AAP 14/3	CONW62	0.560 - 0.620
AAP 14/4	CONW62	0.560 - 0.620
AAP 14/5	CONW69	0.620 - 0.690
AAP 14/7	CONW69	0.620 - 0.690
AAP 14/9	CONW76	0.690 - 0.760
AAP 14/12	CONW83	0.760 - 0.830
AAP 14/19	CONW104	0.970 - 1.040
AAP 14/25	CONW104	0.970 - 1.040
AAP 14/37	CONW125	1.180 - 1.250
AAP 12/2	CONW62	0.560 - 0.620
AAP 12/3	CONW62	0.560 - 0.620
AAP 12/4	CONW69	0.620 - 0.690
AAP 12/5	CONW69	0.620 - 0.690
AAP 12/7	CONW83	0.760 - 0.830
AAP 12/9	CONW83	0.760 - 0.830
AAP 12/12	CONW90	0.830 - 0.900
AAP 12/19	CONW104	0.970 - 1.040
AAP 12/25	CONW118	1.110 - 1.180
AAP 12/37	CONW139	1.320 - 1.390
AAP 10/2	CONW62	0.560 - 0.620

Copper AIA-PVC	Part Number	O.D. Range
AAP 10/3	CONW69	0.620 - 0.690
AAP 10/4	CONW76	0.690 - 0.760
AAP 10/5	CONW76	0.690 - 0.760
AAP 10/7	CONW90	0.830 - 0.900
AAP 10/9	CONW97	0.900 - 0.970
AAP 10/12	CONW104	0.970 - 1.040
AAP 10/19	CONW118	1.110 - 1.180
AAP 10/25	CONW139	1.320 - 1.390
AAP 10/37	CONW166	1.570 - 1.660
AAP 8/3	CONW76	0.690 - 0.760
AAP 8/4	CONW83	0.760 - 0.830
AAP 6/3	CONW90	0.830 - 0.900
AAP 6/4	CONW97	0.900 - 0.970
AAP 4/3	CONW97	0.900 - 0.970
AAP 4/4	CONW104	0.970 - 1.040
AAP 3/3	CONW104	0.970 - 1.040
AAP 3/4	CONW111	1.040 - 1.110
AAP 2/3	CONW111	1.040 - 1.110
AAP 2/4	CONW118	1.110 - 1.180
AAP 1/3	CONW118	1.110 - 1.180
AAP 1/4	CONW139	1.320 - 1.390
AAP 1/03	CONW139	1.320 - 1.390

Copper AIA-PVC	Part Number	O.D. Range
AAP 1/04	CONW148	1.390 - 1.480
AAP 2/03	CONW148	1.390 - 1.480
AAP 2/04	CONW157	1.480 - 1.570
AAP 3/03	CONW157	1.480 - 1.570
AAP 3/04	CONW175	1.660 - 1.750
AAP 4/03	CONW166	1.570 - 1.660
AAP 4/04	CONW184	1.750 - 1.840
AAP 250/3	CONW184	1.750 - 1.840
AAP 250/4	CONW193	1.840 - 1.930
AAP 300/3	CONW193	1.840 - 1.930
AAP 300/4	CONW213	2.020 - 2.130
AAP 350/3	CONW202	1.930 - 2.020
AAP 350/4	CONW224	2.130 - 2.240
AAP 400/3	CONW213	2.020 - 2.130
AAP 400/4	CONW235	2.240 - 2.350
AAP 500/3	CONW235	2.240 - 2.350
AAP 500/4	CONW257	2.460 - 2.570
AAP 600/3	CONW246	2.350 - 2.460
AAP 600/4	CONW285	2.710 - 2.850
AAP 750/3	CONW271	2.570 - 2.710
AAP 750/4	CONW299	2.850 - 2.990

ServiceWireCo.
Manufacturing quality. Delivering service.

ARMORED CABLE

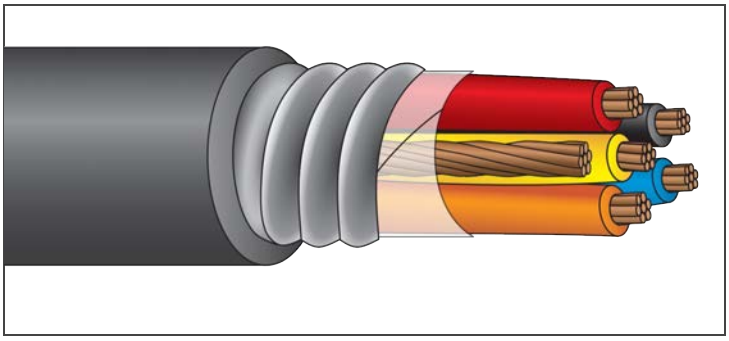

JACKETED MC

XHHW-2/EnviroPlus®

600 Volt Copper, Zero Halogen, Limited Smoke

Factory Mutual Group 1

ISO 9001:2008 · RoHS COMPLIANT · Made in the USA · REACH · LEED FRIENDLY · FM APPROVED

Description:

Conductors are stranded copper, insulated with heat and moisture resistant crosslinked polyethylene *(type XHHW-2)*, phase identified and cabled with a **bare copper ground conductor. Cable core is covered with binder tape and aluminum or galvanized steel interlocked armor, with an overall zero halogen, limited smoke, zero lead jacket. ***Available with tinned conductors.***

***Cable with seven conductors or more will have a green insulated ground.*

Application:

Suitable for use in hazardous locations: Class I - Div 2, Class II - Div 2

Standards:

UL1569
ICEA S-95-658/NEMA WC-70
Flame Rated: IEEE 383 *(70,000 BTU),* IEEE 1202/CSA FT-4,
UL 1685 and UL 1581, Two-hour Firewall
Temperature Rated at 90°C Wet/Dry, Cold Temperature Rated at -40°C
Sunlight Resistant
Direct Burial *(includes encasement in concrete)*
Color Code: K-2 *(other colors available upon request)*
Zero Halogen, Limited Smoke Jacket
RoHS Compliant

Part Number	Number of Conductors	Grounding Conductor (AWG)	Diameter Over Armor (in.)	Jacket Thickness (mils)	Approx. Overall Diameter (in.)	Net Weight (lb./1000')	Ampacity* (30°C ambient) 90°C Wet/Dry
AANH14/2	2	14	0.55	50	0.65	174	25†
AANH14/3	3	14	0.55	50	0.65	192	25†
AANH14/4	4	14	0.55	50	0.65	210	20†
AANH14/5	5	14	0.57	50	0.67	234	20†
AANH14/7	7	14	0.65	50	0.75	295	17†
AANH14/9	9	14	0.73	50	0.83	352	17†
AANH14/12	12	14	0.77	50	0.87	416	12
AANH14/19	19	14	0.89	50	0.99	573	12
AANH14/37	37	14	1.15	50	1.25	964	10
AANH12/2	2	12	0.55	50	0.65	199	30†
AANH12/3	3	12	0.55	50	0.65	226	30†
AANH12/4	4	12	0.57	50	0.67	258	24†
AANH12/5	5	12	0.61	50	0.71	295	24†
AANH12/7	7	12	0.71	50	0.81	381	21†
AANH12/9	9	12	0.79	50	0.89	456	21†
AANH12/12	12	12	0.85	50	0.95	551	15
AANH12/19	19	12	0.97	50	1.07	770	15
AANH12/37	37	12	1.35	50	1.45	1,365	12
AANH10/2	2	10	0.55	50	0.65	237	40†
AANH10/3	3	10	0.59	50	0.69	287	40†
AANH10/4	4	10	0.63	50	0.73	338	32†
AANH10/5	5	10	0.67	50	0.77	388	32†
AANH10/7	7	10	0.79	50	0.89	505	28
AANH10/9	9	10	0.89	50	0.99	611	28
AANH10/12	12	10	0.95	50	1.05	745	20
AANH10/19	19	10	1.09	50	1.19	1,059	20
AANH10/37	37	10	1.51	60	1.63	1,933	16

**Per NEC Table 310.15 (B)(16) (Ampacity derated in accordance with note 8a). †The overcurrent protection for items marked with an obelisk (†) shall not exceed 15 amps for #14 AWG, 20 amps for #12 AWG, and 30 amps for #10 AWG per NEC 310-16 footnote. NOTE: The data shown is approximate and subject to standard industry tolerances.*

servicewire.com

Phoenix, AZ
877-623-9473

Culloden, WV
800-624-3572

Houston, TX
800-231-9473

ARMORED CABLE

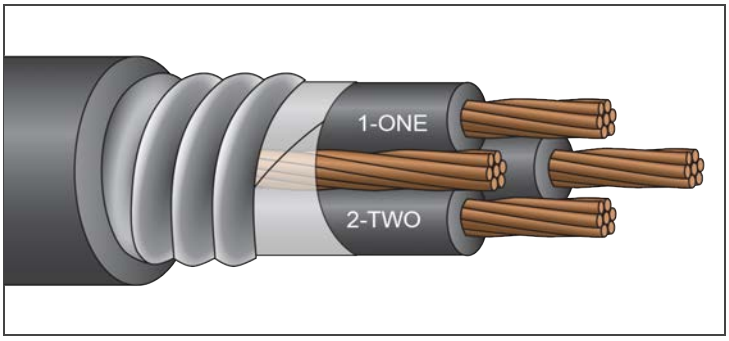

JACKETED MC

XHHW-2/EnviroPlus®

600 Volt Copper, Zero Halogen, Limited Smoke

3 Conductor, Factory Mutual Group 1

Description:

3 conductors, stranded, insulated with heat and moisture resistant crosslinked polyethylene *(type XHHW-2)*, phase identified and cabled with suitable fillers *(as necessary)* and bare copper ground conductor. Cable core is covered with binder tape and aluminum or galvanized steel interlocked armor, with zero halogen, limited smoke, zero lead jacket. ***Available with tinned conductors.***

Application:

Suitable for use in hazardous locations: Class I - Div 2, Class II - Div 2

Standards:

UL1569
ICEA S-95-658/NEMA WC-70
Flame Rated: IEEE 383 *(70,000 BTU),* IEEE 1202/CSA FT-4,
UL 1685 and UL 1581, Two-hour Firewall
Temperature Rated at 90°C Wet/Dry, Cold Temperature Rated at -40°C
Sunlight Resistant
Direct Burial *(includes encasement in concrete)*
Color Code: Method 4 *(K2 on #8; other colors available)*
Zero Halogen, Limited Smoke Jacket
RoHS Compliant

Part Number	Size (AWG or Kcmil)	Strand (no.)	Insulation Thickness (mils)	Grounding Conductor (AWG)	Diameter Over Armor (in.)	Jacket Thickness (mils)	Approx. Diameter Overall (in.)	Approx. Net Weight *Aluminum Armor* (lb./1000')	Approx. Net Weight *Galvanized Armor* (lb./1000')	Ampacity* (30°C ambient) 90°C Wet/Dry
AANH8/3	8	7	45	10	0.73	50	0.83	405	489	55
AANH6/3	6	7	45	8	0.81	50	0.91	547	643	75
AANH4/3	4	7	45	8	0.91	50	1.01	733	854	95
AANH3/3	3	7	45	6	0.97	50	1.07	889	1,011	115
AANH2/3	2	7	45	6	1.03	50	1.13	1,044	1,175	130
AANH1/3	1	19	55	6	1.15	50	1.25	1,264	1,414	145
AANH1/03	1/0	19	55	6	1.31	50	1.41	1,548	1,782	170
AANH2/03	2/0	19	55	6	1.37	50	1.47	1,843	2,110	195
AANH3/03	3/0	19	55	4	1.51	60	1.63	2,311	2,567	225
AANH4/03	4/0	19	55	4	1.63	60	1.75	2,785	3,102	260
AANH250/3	250	37	65	4	1.75	60	1.87	3,297	3,642	290
AANH350/3	350	37	65	3	1.95	60	2.07	4,405	4,807	350
AANH500/3	500	37	65	2	2.25	60	2.37	6,049	6,498	430
AANH600/3	600	61	80	2	2.45	75	2.60	7,260	7,765	475
AANH750/3	750	61	80	1	2.69	75	2.84	8,900	9,449	535
AANH1000/3	1000	61	80	1/0	3.13	85	3.40	11,755	12,417	615

**Per NEC Table 310.15 (B)(16). Four-conductor ampacity assumes three are hot and one is neutral. NOTE: The data shown is approximate and subject to standard industry tolerances.*

ARMORED CABLE

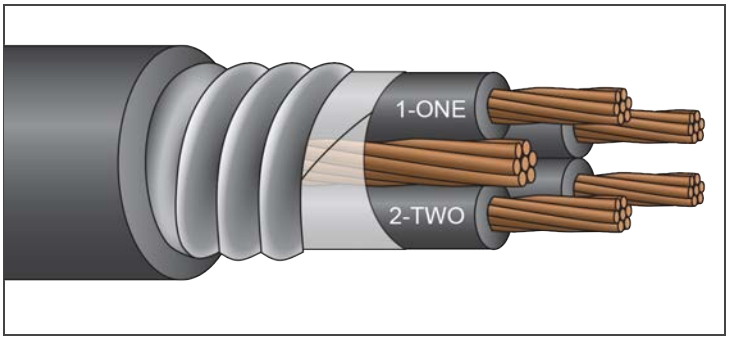

JACKETED MC

XHHW-2/EnviroPlus®

600 Volt Copper, Zero Halogen, Limited Smoke

4 Conductor, Factory Mutual Group 1

Description:

4 conductors, stranded, insulated with heat and moisture resistant crosslinked polyethylene *(type XHHW-2)*, phase identified and cabled with suitable fillers *(as necessary)* and bare copper ground conductor. Cable core is covered with binder tape and aluminum or galvanized steel interlocked armor, with zero halogen, limited smoke, zero lead jacket. ***Available with tinned conductors.***

Application:

Suitable for use in hazardous locations: Class I - Div 2, Class II - Div 2

Standards:

UL1569
ICEA S-95-658/NEMA WC-70
Flame Rated: IEEE 383 *(70,000 BTU),* IEEE 1202/CSA FT-4,
UL 1685 and UL 1581, Two-hour Firewall
Temperature Rated at 90°C Wet/Dry, Cold Temperature Rated at -40°C
Sunlight Resistant
Direct Burial *(includes encasement in concrete)*
Color Code: Method 4 *(K2 on #8; other colors available)*
Zero Halogen, Limited Smoke Jacket
RoHS Compliant

Part Number	Size (AWG or Kcmil)	Strand (no.)	Insulation Thickness (mils)	Grounding Conductor (AWG)	Diameter Over Armor (in.)	Jacket Thickness (mils)	Approx. Diameter Overall (in.)	Approx. Net Weight *Aluminum Armor* (lb./1000')	Approx. Net Weight *Galvanized Armor* (lb./1000')	Ampacity* (30°C ambient) 90°C Wet/Dry
AANH8/4	8	7	45	10	0.79	50	0.89	485	579	55
AANH6/4	6	7	45	8	0.87	50	0.97	663	775	75
AANH4/4	4	7	45	8	0.99	50	1.09	907	1,040	95
AANH3/4	3	7	45	6	1.05	50	1.15	1,099	1,242	115
AANH2/4	2	7	45	6	1.13	50	1.23	1,305	1,452	130
AANH1/4	1	19	55	6	1.33	50	1.43	1,624	1,872	145
AANH1/04	1/0	19	55	6	1.43	50	1.53	1,956	2,227	170
AANH2/04	2/0	19	55	6	1.51	60	1.63	2,381	2,681	195
AANH3/04	3/0	19	55	4	1.65	60	1.77	2,935	3,256	225
AANH4/04	4/0	19	55	4	1.79	60	1.91	3,560	3,925	260
AANH250/4	250	37	65	4	1.91	60	2.03	4,209	4,601	290
AANH350/4	350	37	65	3	2.17	60	2.29	5,665	6,118	350
AANH500/4	500	37	65	2	2.45	75	2.60	7,873	8,390	430
AANH600/4	600	61	80	2	2.71	75	2.86	9,377	9,943	475
AANH750/4	750	61	80	1	2.97	85	3.12	11,513	12,128	535
AANH1000/4	1000	61	80	1/0	3.49	85	3.66	15,232	15,966	615

**Per NEC Table 310.15 (B)(16). Four-conductor ampacity assumes three are hot and one is neutral. NOTE: The data shown is approximate and subject to standard industry tolerances.*

servicewire.com

Phoenix, AZ
877-623-9473

Culloden, WV
800-624-3572

Houston, TX
800-231-9473

ARMORED CABLE

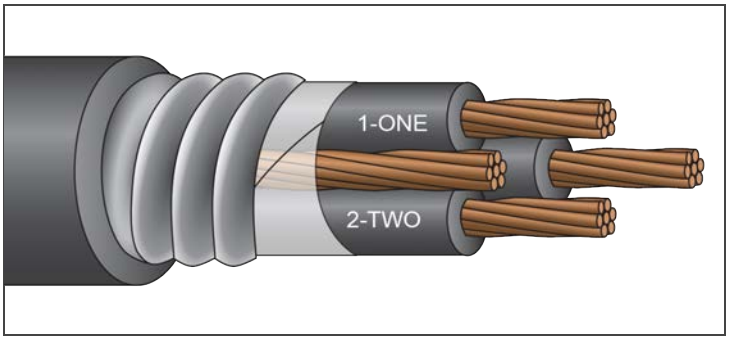

JACKETED MC

RHW-2/PVC

2,000 Volt Copper

3 Conductor

ISO 9001: 2015 RoHS COMPLIANT Made in the USA REACH

Description:

3 conductors, stranded, insulated with heat and moisture resistant crosslinked polyethylene *(type RHW-2)*, phase identified and cabled with suitable fillers and bare copper grounding conductor. Cable core covered with binder tape and aluminum or galvanized steel interlocked armor, with black PVC jacket. ***Jacket available under armor and in colors. Available with EnviroPlus® (LSZH) jacket.***

Application:

Suitable for use in industrial power distribution systems where continuity of service is the prime consideration. May be installed in wet or dry locations, directly buried or encased in concrete. Suitable for use in cable tray.

Suitable for use in hazardous locations: Class I - Div 2, Class II - Div 2

Standards:

UL 44, UL 854 and UL 1569
ICEA S-95-658/NEMA WC-70
Flame Rated: IEEE 383 *(70,000 BTU),* ICEA T-29-520 *(210,000 BTU),* IEEE 1202/CSA FT-4, Two-hour Firewall
Temperature Rated at 90°C Wet /Dry
Sunlight and Oil Resistant II Jacket
Direct Burial *(includes encasement in concrete)*
Color Code: Method 4
RoHS Compliant

Part Number	Size (AWG or Kcmil)	Strand (no.)	Insulation Thickness (mils)	Grounding Conductor (AWG)	Diameter Over Armor (in.)	Jacket Thickness (mils)	Approx. Diameter Overall (in.)	Approx. Net Weight *Aluminum Armor* (lb./1000')	Approx. Net Weight *Galvanized Armor* (lb./1000')	Ampacity* (30°C ambient)
AAP2K6/3	6	7	85	8	0.99	50	1.09	640	765	75
AAP2K4/3	4	7	85	6	1.09	50	1.19	834	975	95
AAP2K2/3	2	7	85	6	1.27	50	1.37	1,159	1,427	130
AAP2K1/3	1	7	105	6	1.41	50	1.51	1,414	1,718	145
AAP2K1/03	1/0	19	105	6	1.51	60	1.63	1,715	2,044	170
AAP2K2/03	2/0	19	105	6	1.61	60	1.73	2,109	2,432	195
AAP2K3/03	3/0	19	105	4	1.71	60	1.83	2,497	2,843	225
AAP2K4/03	4/0	19	105	4	1.85	60	1.97	2,990	3,358	260
AAP2K250/3	250	37	120	4	1.97	60	2.09	3,571	3,977	290
AAP2K350/3	350	37	120	3	2.21	60	2.33	4,720	5,181	350
AAP2K500/3	500	37	120	2	2.47	75	2.62	6,642	6,971	430
AAP2K750/3	750	61	135	1	2.89	75	3.04	9,288	9,907	535

**Per NEC Table 310.15 (B)(16). NOTE: The data shown is approximate and subject to standard industry tolerances.*

servicewire.com

Phoenix, AZ
877-623-9473

Culloden, WV
800-624-3572

Houston, TX
800-231-9473

Service Wire Co.
Manufacturing quality. Delivering service.

ARMORED CABLE

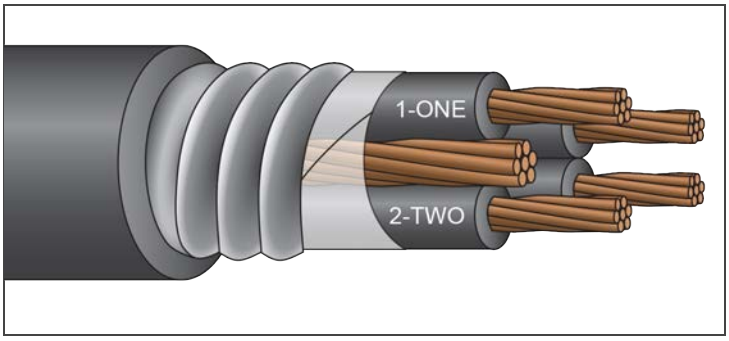

JACKETED MC

RHW-2/PVC

2,000 Volt Copper

4 Conductor

ISO 9001: 2015 RoHS COMPLIANT Made in the USA REACH

Description:

4 Conductors, stranded, insulated with heat and moisture resistant crosslinked polyethylene *(type RHW-2)*, phase identified and cabled with suitable fillers and bare copper grounding conductor. Cable core covered with binder tape and aluminum or galvanized steel interlocked armor, with black PVC jacket. ***Jacket available under armor and in colors. Available with EnviroPlus® (LSZH) jacket.***

Application:

Suitable for use in industrial power distribution systems where continuity of service is the prime consideration. May be installed in wet or dry locations, directly buried or encased in concrete. Suitable for use in cable tray.

Suitable for use in hazardous locations: Class I - Div 2, Class II - Div 2

Standards:

UL 44, UL 854 and UL 1569
ICEA S-95-658/NEMA WC-70
Flame Rated: IEEE 383 *(70,000 BTU),* ICEA T-29-520 *(210,000 BTU),* IEEE 1202/CSA FT-4, Two-hour Firewall
Temperature Rated at 90°C Wet/Dry
Sunlight and Oil Resistant II Jacket
Direct Burial *(includes encasement in concrete)*
Color Code: Method 4
RoHS Compliant

Part Number	Size (AWG or Kcmil)	Strand (no.)	Insulation Thickness (mils)	Grounding Conductor (AWG)	Diameter Over Armor (in.)	PVC Jacket Thickness (mils)	Approx. Diameter Overall (in.)	Approx. Net Weight *Aluminum Armor* (lb./1000')	Approx. Net Weight *Galvanized Armor* (lb./1000')	Ampacity* (30°C ambient)
AAP2K6/4	6	7	85	8	1.07	50	1.17	778	924	75
AAP2K4/4	4	7	85	8	1.23	50	1.33	1,034	1,195	95
AAP2K2/4	2	7	85	6	1.37	50	1.47	1,469	1,737	130
AAP2K1/4	1	7	105	6	1.57	60	1.69	1,849	2,152	145
AAP2K1/04	1/0	19	105	6	1.67	60	1.79	2,204	2,531	170
AAP2K2/04	2/0	19	105	4	1.79	60	1.91	2,672	3,036	195
AAP2K3/04	3/0	19	105	4	1.89	60	2.01	3,179	3,554	225
AAP2K4/04	4/0	19	105	4	2.03	60	2.15	3,822	4,231	260
AAP2K250/4	250	37	120	4	2.21	60	2.33	4,570	5,011	290
AAP2K350/4	350	37	120	3	2.43	75	2.58	6,125	6,626	350
AAP2K500/4	500	37	120	2	2.73	75	2.88	8,316	8,887	430
AAP2K750/4	750	61	135	1	3.21	85	3.38	12,080	12,772	535

**Per NEC Table 310.15 (B)(16). Four-conductor ampacity assumes three are hot and one is neutral. NOTE: The data shown is approximate and subject to standard industry tolerances.*

servicewire.com

Phoenix, AZ
877-623-9473

Culloden, WV
800-624-3572

Houston, TX
800-231-9473

ARMORED CABLE

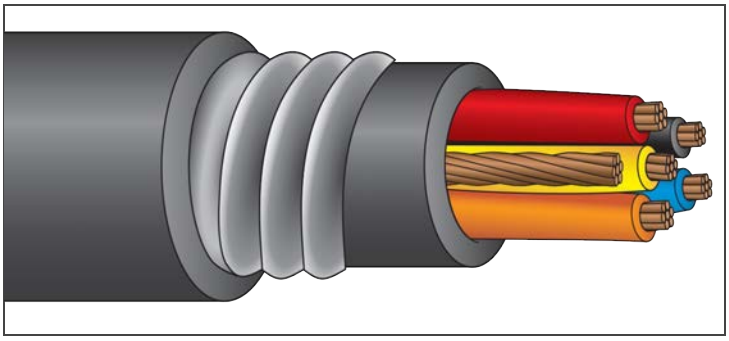

SERVICETECK® (TECK90)

XHHW-2 or RW90/PVC

600 Volt Copper

Description:

Class B stranded copper, insulated with heat and moisture resistant crosslinked polyethylene *(type XHHW-2 or RW90)*, phase identified and cabled with **bare copper ground conductor. Cable core covered with binder tape, an inner PVC jacket, aluminum interlocked armor and outer PVC jacket.

***Cable with seven conductors or more will have a green insulated ground.*

Application:

Suitable for use in exposed or concealed wiring in dry or wet locations, in ventilated or ladder type cable trays in dry or wet conditions, on walls or beams, or directly buried.

Suitable for use in hazardous locations: Class I - Groups A, B, C and D, Class II - Groups E, F and G, Class III - All Groups

Standards:

UL 1569, C(UL) Teck 90: CSA/UL Listed
ICEA S-95-658/NEMA WC-70
Flame Rated: IEEE 383 *(70,000 BTU)*, ICEA T-29-520 *(210,000 BTU)*, FT-4 Flame Test, IEEE 1202/CSA FT-4, Two-hour Firewall
Temperature Rated at 90°C Wet/Dry
Cold Temperature Rated at -25°C
Sunlight and Oil Resistant II Jacket
Direct Burial *(includes encasement in concrete)*
Color Code: K-2 *(3 and 5-19 conductor)*, K-2 and Neutral White *(2 and 4 conductor)*
RoHS Compliant

Part Number	Number of Conductors	Grounding Conductor (AWG)	PVC Jacket Thickness *Inner* (mils)	PVC Jacket Thickness *Outer* (mils)	Diameter Inner Jacket	Diameter Armor	Diameter Overall	Approx. Net Weight (lb./1000')	Ampacity* (30°C ambient) 90°C Wet/Dry
PAAP14/2	2	14	50	50	0.39	0.59	0.69	214	25†
PAAP14/3	3	14	50	50	0.41	0.61	0.71	239	25†
PAAP14/4	4	14	50	50	0.44	0.65	0.75	271	20†
PAAP14/5	5	14	50	50	0.48	0.69	0.79	303	20†
PAAP14/7	7	14	50	50	0.56	0.77	0.87	372	17†
PAAP14/9	9	14	50	50	0.64	0.85	0.95	436	17†
PAAP14/12	12	14	50	50	0.69	0.89	0.99	505	12
PAAP14/19	19	14	50	50	0.80	1.01	1.11	673	12
PAAP12/2	2	12	50	50	0.42	0.63	0.73	253	30†
PAAP12/3	3	12	50	50	0.45	0.65	0.75	287	30†
PAAP12/4	4	12	50	50	0.49	0.69	0.79	328	24†
PAAP12/5	5	12	50	50	0.53	0.73	0.83	369	24†
PAAP12/7	7	12	50	50	0.62	0.83	0.93	464	21†
PAAP12/9	9	12	50	50	0.71	0.91	1.01	547	21†
PAAP12/12	12	12	50	50	0.77	0.97	1.07	648	15
PAAP12/19	19	12	50	50	0.89	1.09	1.19	878	15
PAAP10/2	2	10	50	50	0.47	0.67	0.77	306	40†
PAAP10/3	3	10	50	50	0.50	0.71	0.81	358	40†
PAAP10/4	4	10	50	50	0.54	0.75	0.85	413	32†
PAAP10/5	5	10	50	50	0.59	0.79	0.89	467	32†
PAAP10/7	7	10	50	50	0.70	0.91	1.01	595	28
PAAP10/9	9	10	50	50	0.80	1.01	1.11	710	28
PAAP10/12	12	10	50	50	0.87	1.07	1.17	851	20
PAAP10/19	19	10	50	50	1.01	1.27	1.37	1,208	20

**Per NEC Table 310.15 (B)(16). NOTE: The data shown is approximate and subject to standard industry tolerances.*

servicewire.com

Phoenix, AZ
877-623-9473

Culloden, WV
800-624-3572

Houston, TX
800-231-9473

ARMORED CABLE

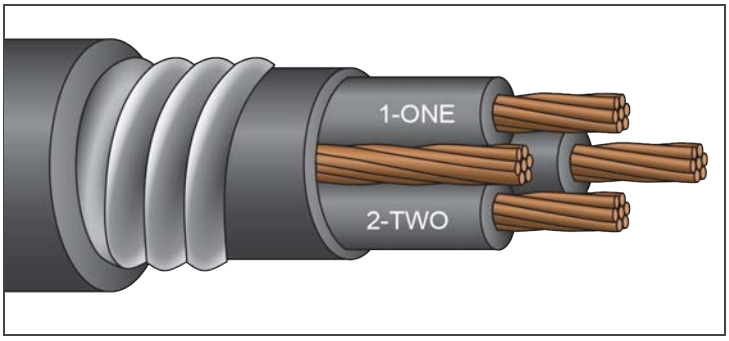

SERVICETECK® (TECK90)

XHHW-2 or RW90/PVC

600 Volt Copper

3-4 Conductor

Description:

Stranded copper, insulated with heat and moisture resistant crosslinked polyethylene *(type XHHW-2 or RW90)*, phase identified and cabled with bare copper ground conductor*(s)*. Cable core covered with binder tape, an inner PVC jacket, aluminum interlocked armor and outer PVC jacket.

Application:

Suitable for use in exposed or concealed wiring in dry or wet locations, in ventilated or ladder type cable trays in dry or wet conditions, on walls or beams, directly buried.

Suitable for use in hazardous locations: Class I - Groups A, B, C and D, Class II - Groups E, F and G, Class III - All Groups

Standards:

UL 1569, C(UL) Teck 90:CSA/UL Listed

ICEA S-95-658/NEMA WC-70

Flame Rated: IEEE 383 *(70,000 BTU),* ICEA T-29-520 *(210,000 BTU),* IEEE 1202/CSA FT-4, Two-hour Firewall

Temperature Rated at 90°C Wet/Dry, Cold Temperature Rated at -25°C

Sunlight and Oil Resistant II Jacket

Direct Burial *(includes encasement in concrete)*

Color Code: Method 4 *(K2 on #8; other color codes available)*

RoHS Compliant

ARMORED CABLE

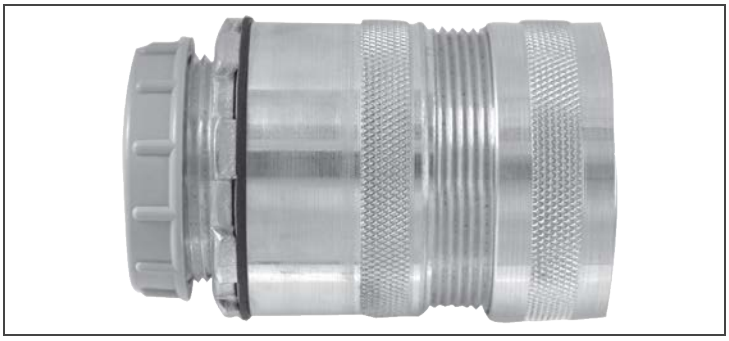

SERVICETECK® (TECK90)

Connector

Description:

Connectors are a one-piece body construction with a unique scroll design that provides a 360º ground to armor.

Application:

Suitable for industrial and commercial use. Manufactured from 6061 copper-free aluminum. A complete range of NPT *(National Pipe Thread)* sizes are available from 1/2" through 4" to accommodate armored cable type MC O.D. sizes from 0.38 - 4.33".

Standards:

UL: Class II and III — All Divisions

Item	Part Number	O.D. Range	Item	Part Number	O.D. Range	Item	Part Number	O.D. Range
PAAP14/2	CONW62	0.560 - 0.620	PAAP10/4	CONW83	0.760 - 0.830	PAAP500/3	CONW246	2.350 - 2.460
PAAP14/3	CONW69	0.620 - 0.690	PAAP10/5	CONW83	0.760 - 0.830	PAAP600/3	CONW271	2.570 - 2.710
PAAP14/4	CONW69	0.620 - 0.690	PAAP10/7	CONW97	0.900 - 0.970	PAAP750/3	CONW299	2.850 - 2.990
PAAP14/5	CONW76	0.690 - 0.760	PAAP10/9	CONW104	0.970 - 1.040	PAAP8/4	CONW97	0.900 - 0.970
PAAP14/7	CONW83	0.760 - 0.830	PAAP10/12	CONW111	1.040 - 1.110	PAAP6/4	CONW104	0.970 - 1.040
PAAP14/9	CONW90	0.830 - 0.900	PAAP10/19	CONW132	1.250 - 1.320	PAAP4/4	CONW118	1.110 - 1.180
PAAP14/12	CONW97	0.900 - 0.970	PAAP8/3	CONW90	0.830 - 0.900	PAAP3/4	CONW125	1.180 - 1.250
PAAP14/19	CONW104	0.970 - 1.040	PAAP6/3	CONW104	0.970 - 1.040	PAAP2/4	CONW139	1.320 - 1.390
PAAP12/2	CONW69	0.620 - 0.690	PAAP4/3	CONW111	1.040 - 1.110	PAAP1/4	CONW148	1.390 - 1.480
PAAP12/3	CONW69	0.620 - 0.690	PAAP3/3	CONW111	1.040 - 1.110	PAAP1/04	CONW157	1.480 - 1.570
PAAP12/4	CONW76	0.690 - 0.760	PAAP2/3	CONW125	1.180 - 1.250	PAAP2/04	CONW166	1.570 - 1.660
PAAP12/5	CONW76	0.690 - 0.760	PAAP1/3	CONW139	1.320 - 1.390	PAAP3/04	CONW184	1.750 - 1.840
PAAP12/7	CONW90	0.830 - 0.900	PAAP1/03	CONW148	1.390 - 1.480	PAAP4/04	CONW202	1.840 - 2.020
PAAP12/9	CONW97	0.900 - 0.970	PAAP2/03	CONW157	1.480 - 1.570	PAAP250/4	CONW213	2.020 - 2.130
PAAP12/12	CONW104	0.970 - 1.040	PAAP3/03	CONW166	1.570 - 1.660	PAAP350/4	CONW235	2.240 - 2.350
PAAP12/19	CONW118	1.110 - 1.180	PAAP4/03	CONW175	1.660 - 1.750	PAAP500/4	CONW271	2.570 - 2.710
PAAP10/2	CONW76	0.690 - 0.760	PAAP250/3	CONW193	1.840 - 1.930	PAAP600/4	CONW299	2.850 - 2.990
PAAP10/3	CONW76	0.690 - 0.760	PAAP350/3	CONW213	2.020 - 2.130	PAAP750/4	CONW313	2.990 - 3.130

Service Wire Co.
Manufacturing quality. Delivering service.

ARMORED CABLE

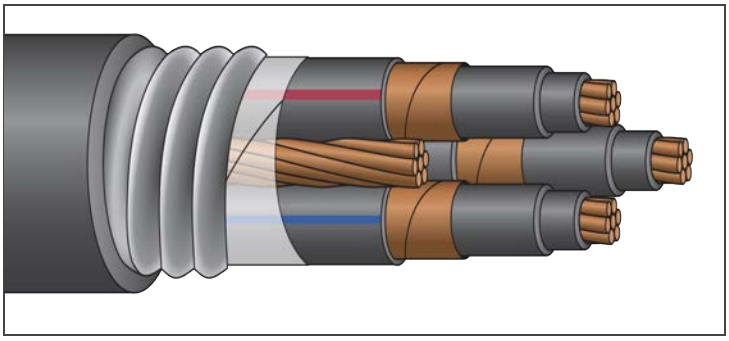

MV-90/MV-105

Nonshielded/Shielded, EPR

2,400/5,000 Volt Copper

Description:

Non-shielded: Class B stranded copper with extruded conductor shield, insulated with heat and moisture resistant EPR *(2,400V rated)*.
Shielded: Class B stranded copper with extruded semi- conductor shield, insulated with heat and moisture resistant EPR *(5,000V rated — 133% insulation level; 8,000V rated — 100% insulation level)* with conductor jacket *(PVC, CPE, etc.)*.

3 conductors cabled with suitable fillers (when required) and bare copper ground conductor. Cable core covered with binder tape, aluminum or galvanized interlocked armor and yellow PVC jacket. ***Jacket available under armor and in colors.***

Application:

Suitable for use in hazardous locations: Class I - Div 2

Standards:

UL 1072
Non-shielded: ICEA S-96-659/NEMA WC-71
Shielded: ICEA S-93-639/NEMA WC-74
Flame Rated: IEEE 383 *(70,000 BTU)*, ICEA T-29-520 *(210,000 BTU)*, IEEE 1202/CSA FT-4
Conductors Rated at 105°C *(5kV)*/90°C *(2.4kV)*
Sunlight and Oil Resistant II Jacket
Direct Burial *(includes encasement in concete)*
Color Code: K-2 Stripes
RoHS Compliant

Part Number	Size (AWG or Kcmil)	Strand (no.)	Conductor Insulation Thickness (mils)	Conductor Jacket Thickness (mils)	Grounding Conductor (AWG)	Diameter Over Armor (in.)	PVC Jacket Thickness (mils)	Approx. Diameter Overall (in.)	Approx. Net Weight *Aluminum Armor* (lb./1000')	Approx. Net Weight *Galvanized Armor* (lb./1000')	Ampacity* (40°C ambient)
AP2.4K6/3E	6	7	125	80	6	1.65	60	1.77	1,234	1,555	69
AP2.4K4/3E	4	7	125	80	6	1.75	60	1.87	1,463	1,818	91
AP2.4K2/3E	2	7	125	80	6	1.89	60	2.01	1,795	2,172	125
AP2.4K1/3E	1	19	125	80	4	1.95	60	2.07	2,076	2,467	140
AP2.4K1/03E	1/0	19	125	80	4	2.03	60	2.15	2,345	2,765	165
AP2.4K2/03E	2/0	19	125	80	4	2.17	60	2.29	2,693	3,124	190
AP2.4K4/03E	4/0	19	125	95	3	2.49	75	2.64	4,015	4,530	255
AP2.4K250/3E	250	37	140	110	3	2.65	75	2.80	4,769	5,332	280
AP2.4K350/3E	350	37	140	110	2	2.89	75	3.04	6,017	6,635	350
AP2.4K500/3E	500	37	140	110	1	3.17	85	3.34	7,881	8,564	425
AP2.4K750/3E	750	61	155	125	1/0	3.69	85	3.86	11,594	12,397	525
AP5KS6/3E	6	7	115	60	6	1.75	60	1.87	1,478	1,833	69
AP5KS4/3E	4	7	115	60	6	1.89	60	2.01	1,765	2,142	91
AP5KS2/3E	2	7	115	60	6	1.99	60	2.11	2,085	2,496	125
AP5KS1/3E	1	19	115	60	4	2.09	60	2.21	2,889	2,889	140
AP5KS1/03E	1/0	19	115	80	4	2.27	75	2.42	2,898	3,374	165
AP5KS2/03E	2/0	19	115	80	4	2.37	75	2.52	3,268	3,766	190
AP5KS4/03E	4/0	19	115	80	3	2.57	75	2.72	4,255	4,800	255
AP5KS250/3E	250	37	115	80	3	2.71	75	2.86	5,075	5,641	280
AP5KS350/3E	350	37	115	80	2	2.91	75	3.06	6,326	6,950	350
AP5KS500/3E	500	37	115	80	1	3.25	85	3.42	8,650	9,352	425
AP5KS750/3E	750	61	115	80	1/0	3.65	85	3.65	11,827	12,621	525

**Per NEC Table 310.60 (C)(75). Based on one three-conductor cable. NOTE: The data shown is approximate and subject to standard industry tolerances.*

servicewire.com

Phoenix, AZ
877-623-9473

Culloden, WV
800-624-3572

Houston, TX
800-231-9473

ARMORED CABLE

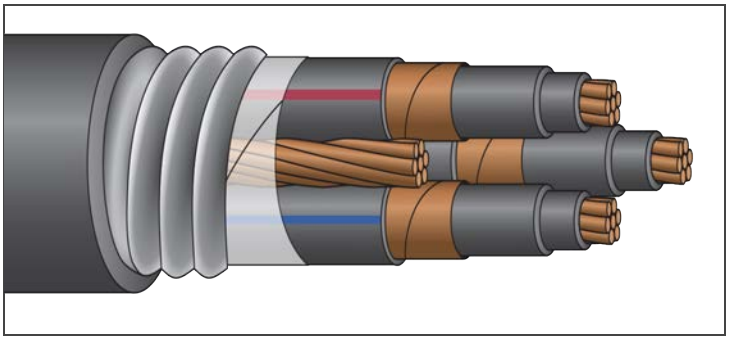

MV-105

133% Jacketed EPR

15,000 Volt Copper

Description:

Class B stranded copper with extruded semi-conductor shield, insulated with heat and moisture resistant EPR *(133% insulation level)* with conductor jacket *(PVC, CPE, etc.)*. Cabled with suitable fillers *(when required)* and bare copper ground conductor. Cable core covered with binder tape, aluminum or galvanized steel interlocked armor and red PVC jacket. ***Jacket available under armor and in colors.***

Application:

Suitable for use in hazardous locations: Class I - Div 2

Standards:

UL 1072
ICEA S-93-639/NEMA WC-74
Flame Rated: IEEE 383 *(70,000 BTU)*, ICEA T-29-520 *(210,000 BTU)*, IEEE 1202/CSA FT-4
Temperature Rated at 105°C Wet/Dry *(conductors)*
Sunlight and Oil Resistant II Jacket
Direct Burial *(includes encasement in concrete)*
Color Code: K-2 Stripes
RoHS Compliant

Part Number	Size (AWG or Kcmil)	Strand (no.)	Conductor Insulation Thickness (mils)	Conductor Jacket Thickness (mils)	Grounding Conductor (AWG)	Diameter Over Armor (in.)	PVC Jacket Thickness (mils)	Approx. Diameter Overall (in.)	Approx. Net Weight *Aluminum Armor* (lb./1000')	Approx. Net Weight *Galvanized Armor* (lb./1000')	Ampacity* (40°C ambient)
AP15K2/3E	2	7	220	80	6	2.57	75	2.72	2,987	3,527	145
AP15K1/3E	1	19	220	80	4	2.65	75	2.80	3,298	3,861	165
AP15K1/03E	1/0	19	220	80	4	2.77	75	2.92	3,674	4,243	195
AP15K2/03E	2/0	19	220	80	4	2.85	75	3.00	4,083	4,692	220
AP15K4/03E	4/0	19	220	80	3	3.09	85	3.26	5,100	5,733	290
AP15K250/3E	250	37	220	80	3	3.21	85	3.38	6,180	6,872	315
AP15K350/3E	350	37	220	80	2	3.41	85	3.58	7,507	8,246	385
AP15K500/3E	500	37	220	80	1	3.69	85	3.86	9,878	10,682	470
AP15K750/3E	750	61	220	110	1/0	4.21	85	4.38	13,610	14,537	570

**Per NEC Table 310.60 (C)(75). Based on one three-conductor cable. NOTE: The data shown is approximate and subject to standard industry tolerances.*

servicewire.com

Phoenix, AZ
877-623-9473

Culloden, WV
800-624-3572

Houston, TX
800-231-9473

PUMP CABLE

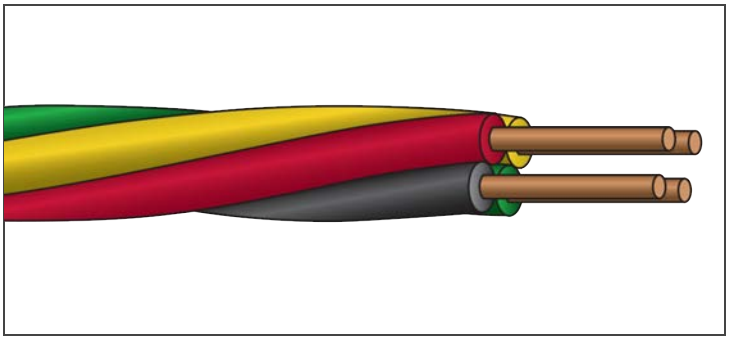

THW TWISTED

Submersible Pump Cable

600 Volt Copper

Description:

Solid or stranded copper conductors, insulated with PVC *(type THW)*, twisted with a green insulated ground conductor.

Application:

Suitable for use within the well casing to supply power to the pump.

Standards:

UL 83 and UL1581
Temperature Rated at 75°C Wet/Dry
Oil and Grease Resistant
Color Code: Black, Red, Yellow, Green *(ground)*
RoHS Compliant

Part Number	Conductor Size *Power* (AWG)	Conductor Size *Ground* (AWG)	Dimensions Insulation (in.)	Dimensions O.D. (in.)	Standard Packaging (250')	Standard Packaging (500')	Standard Packaging (1,000')	Ampacity NEC§	Weight (lb./1000')
PT14/2GG	14/2 (sol)	14 (solid)	0.045	0.33		X	X	15	67
PT12/2GG	12/2 (sol)	12 (solid)	0.045	0.37	X	X	X	20	94
PT10/2GG	10/2 (sol)	10 (solid)	0.045	0.41		X	X	30	135
PT14/3GG	14/3 (sol)	14 (solid)	0.045	0.37		X	X	15	89
PT12/3GG	12/3 (sol)	12 (solid)	0.045	0.41		X	X	20	125
PT10/3GG	10/3 (sol)	10 (solid)	0.045	0.46		X	X	30	180
PT8/3GG	8/3 (7 str)	10 (7 str)	0.060	0.63		X	X	50	276
PT6/3GG	6/3 (7 str)	8 (7 str)	0.060	0.72		X	X	65	417
PT4/3GG	4/3 (7 str)	8 (7 str)	0.060	0.84		X	X	85	585
PT2/3GG	2/3 (7 str)	6 (7 str)	0.060	1.00		X	X	115	861

#2 AWG through 4/0 AWG twisted unjacketed available upon request. §Per NEC Table 310.15 (B)(16). NOTE: The data shown is approximate and subject to standard industry tolerances.

PUMP CABLE

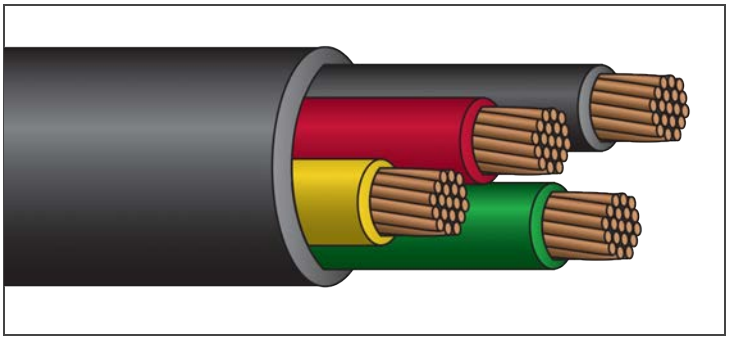

THW/ROUND JACKETED

Submersible Pump Cable

600 Volt Copper

Description:

Stranded copper conductors, insulated with color coded PVC *(type THW)*, twisted with green insulated ground *(optional)* and an overall PVC jacket.

Application:

Suitable for use within the well casing to supply power to the pump and where extra mechanical protection during installation and operation are required.

Standards:

UL 83, UL1277 (#14 AWG - #6 AWG) and UL 1581
Temperature Rated at 75°C Wet/Dry
Oil and Grease Resistant
Acid, Alkali, Oil, Grease, Weather, Ozone and Sunlight Resistant Jacket
Direct Burial *(#14 AWG - #6 AWG)*
Color Code: Black, Red, Yellow, Green *(ground)*
RoHS Compliant

Part Number	Conductor Size *Power* (AWG)	Conductor Size *Ground* (AWG)	Dimensions Insulation (in.)	Dimensions Jacket (in.)	Dimensions O.D. (in.)	Standard Packaging (500')	Standard Packaging (1,000')	Standard Packaging (bulk)	Ampacity NEC§	Weight (lb./1000')
PTJ12/3	12 (7 str)		0.045	0.045	0.48	X	X		20	134
PTJ10/3	10 (7 str)		0.045	0.060	0.56	X	X		30	196
PTJ8/3	8 (7 str)		0.060	0.060	0.69	X	X		50	296
PTJ6/3	6 (19 str)		0.060	0.060	0.77	X	X		65	409
PTJ4/3	4 (19 str)		0.060	0.045	0.84			X	85	559
PTJ12/3GG	12 (7 str)	12 (7 str)	0.045	0.045	0.53	X	X		20	170
PTJ10/3GG	10 (7 str)	10 (7 str)	0.045	0.060	0.61	X	X		30	248
PTJ8/3GG	8 (7 str)	10 (7 str)	0.060	0.060	0.75	X	X		50	350
PTJ6/3GG	6 (19 str)	8 (19 str)	0.060	0.080	0.89	X	X		65	525
PTJ4/3GG	4 (19 str)	8 (19 str)	0.060	0.045	0.87	X	X		85	636
PTJ2/3GG	2 (19 str)	6 (19 str)	0.060	0.045	0.99			X	115	929

#1 AWG through 4/0 AWG round jacketed pump available upon request. §Per NEC Table 310.15 (B)(16). NOTE: The data shown is approximate and subject to standard industry tolerances.

PUMP CABLE

THW/RAINBOW WIRE®

Submersible Pump Cable

600 Volt Copper, Flat with Ground

Description:

Stranded copper conductors are insulated with color coded PVC *(type THW)* and bonded together with green insulated ground, configured flat and parallel with no overall jacket.

Application:

Suitable for use within the well casing to supply power to the pump and where flexibility during installation and operation are required.

Standards:

UL 83 and UL1581
Temperature Rated at 75°C Wet/Dry
Oil, Grease and Abrasion Resistant
Color Code: Black, Red, Yellow, Green *(ground)*
RoHS Compliant

Part Number	Conductor Size *Power* (AWG)	Conductor Size *Ground* (AWG)	Dimensions Insulation (in.)	Dimensions O.D. (in.)	Standard Packaging (500')	Standard Packaging (1,000')	Ampacity NEC§	Weight (lb./1000')
PRB12/2GG	12/2 (7 str)	12 (7 str)	0.045	0.18 x 0.55	X	X	20	97
PRB10/2GG	10/2 (7 str)	10 (7 str)	0.045	0.21 x 0.61	X	X	30	139
PRB8/2GG	8/2 (7 str)	10 (7 str)	0.060	0.27 x 0.79	X	X	50	210
PRB12/3GG	12/3 (7 str)	12 (7 str)	0.045	0.18 x 0.73	X	X	20	130
PRB10/3GG	10/3 (7 str)	10 (7 str)	0.045	0.21 x 0.82	X	X	30	185
PRB8/3GG	8/3 (7 str)	10 (7 str)	0.060	0.27 x 1.05	X	X	50	285
PRB6/3GG	6/3 (19 str)	8 (7 str)	0.060	0.30 x 1.21	X	X	65	415

NOTE: The data shown is approximate and subject to standard industry tolerances. §Per NEC Table 310.15 (B)(16).

PUMP CABLE

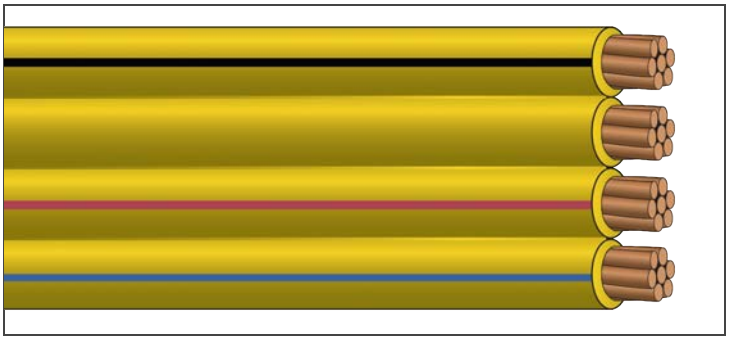

THW/FLAT YELLOW

Submersible Pump Cable

600 Volt Copper

Description:

Stranded copper conductors are insulated with yellow PVC *(type THW)* and bonded together with yellow insulated ground, configured flat and parallel with no overall jacket.

Application:

Suitable for use within the well casing to supply power to the pump and where flexibility during installation and operation are required.

Standards:

UL 83 and UL 1581
Temperature Rated at 75°C Wet/Dry
Oil, Grease and Abrasion Resistant
Color Code: K-2 Stripes
RoHS Compliant

Part Number	Conductor Size *Power* (AWG)	Conductor Size *Ground* (AWG)	Dimensions Insulation (in.)	Dimensions O.D. (in.)	Standard Packaging (500')	Standard Packaging (1,000')	Ampacity NEC§	Weight (lb./1000')
PYW14/2GG	14/2 (7 str)	14 (7 str)	0.045	0.17 x 0.53	X	X	15	69
PYW12/2GG	12/2 (7 str)	12 (7 str)	0.045	0.19 x 0.57	X	X	20	96
PYW10/2GG	10/2 (7 str)	10 (7 str)	0.045	0.21 x 0.66	X	X	30	138
PYW8/2GG	8/2 (7 str)	8 (7 str)	0.060	0.27 x 0.79	X	X	50	210
PYW6/2GG	6/2 (7 str)	6 (7 str)	0.060	0.31 x 0.92	X	X	65	401
PYW14/3GG	14/3 (7 str)	14 (7 str)	0.045	0.17 x 0.72	X	X	15	91
PYW12/3GG	12/3 (7 str)	12 (7 str)	0.045	0.19 x 0.75	X	X	20	128
PYW10/3GG	10/3 (7 str)	10 (7 str)	0.045	0.21 x 0.84	X	X	30	184
PYW8/3GG	8/3 (7 str)	10 (7 str)	0.060	0.27 x 1.06	X	X	50	269
PYW6/3GG	6/3 (7 str)	8 (7 str)	0.060	0.31 x 1.23	X	X	65	401
PYW4/3GG	4/3 (7 str)	8 (7 str)	0.060	0.35 x 1.32			85	561

§Per NEC Table 310.15 (B)(16). NOTE: The data shown is approximate and subject to standard industry tolerances.

PUMP CABLE

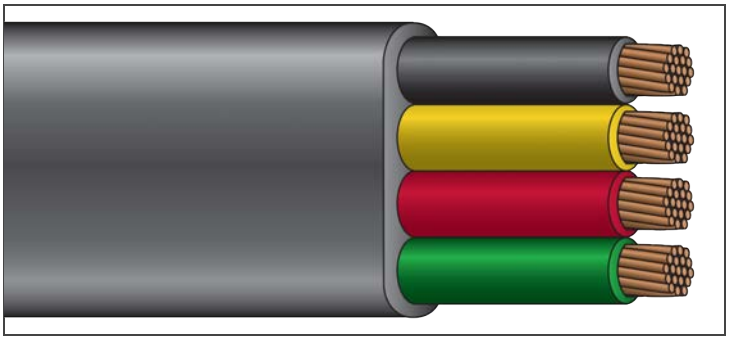

THW/FLAT BLACK

Submersible Pump Cable

600 Volt Copper, Heavy Duty Flat

14 AWG - 2 AWG

Description:

Stranded copper conductors are insulated with color coded PVC *(type THW)* and configured flat and parallel with green insulated ground and overall PVC jacket applied directly over the conductors with a non-penetrating web.

Application:

Suitable for use within the well casing to supply power to the submersible pump and where extra mechanical protection and flexibility during installation and operation are required.

Standards:

UL Standard 83
Temperature Rated at 75°C Wet/Dry
Color Code: Black, Red, Yellow, Green *(ground),*
Acid, Alkali, Oil, Grease, Abrasion and Crush Resistant
Weather, Ozone and Sunlight Resistant Jacket
RoHS Compliant

Part Number	Conductor Size *Power* (AWG)	Conductor Size *Ground* (AWG)	Dimensions Insulation (in.)	Dimensions Jacket (in.)	Dimensions O.D. (in.)	Standard Packaging (500')	Standard Packaging (1,000')	Standard Packaging (bulk)	Ampacity NEC§	Weight (lb./1000')
PFB14/2GG	14/2 (7 str)	14 (7 str)	0.045	0.045	0.25 x 0.58			X	15	114
PFB12/2GG	12/2 (19 str)	12 (19 str)	0.045	0.045	0.27 x 0.64	X	X		20	154
PFB10/2GG	10/2 (19 str)	10 (19 str)	0.045	0.045	0.30 x 0.71	X	X		30	212
PFB8/2GG	8/2 (19 str)	10 (19 str)	0.060	0.045	0.35 x 0.82	X	X		50	278
PFB14/3GG	14/3 (7 str)	14 (7 str)	0.045	0.045	0.25 x 0.74	X	X		15	147
PFB12/3GG	12/3 (19 str)	12 (19 str)	0.045	0.045	0.27 x 0.82	X	X		20	192
PFB10/3GG	10/3 (19 str)	10 (19 str)	0.045	0.045	0.30 x 0.91	X	X		30	258
PFB8/3GG	8/3 (19 str)	10 (19 str)	0.060	0.045	0.35 x 1.08	X	X		50	376
PFB6/3GG	6/3 (19 str)	8 (19 str)	0.060	0.045	0.39 x 1.26	X	X		65	528
PFB4/3GG	4/3 (19 str)	8 (19 str)	0.060	0.045	0.44 x 1.40	X	X		85	726
PFB2/3GG	2/3 (19 str)	6 (19 str)	0.060	0.045	0.49 x 1.60	X	X		115	1,049

§Per NEC Table 310.15 (B)(16). NOTE: The data shown is approximate and subject to standard industry tolerances.

SUBMERSIBLE PUMP CABLE

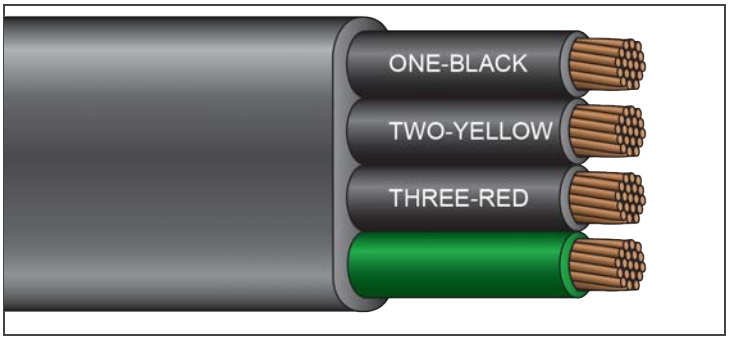

FLAT BLACK

RHW-2/PVC

600 Volt Copper, Super Heavy Duty

1/0 AWG - 500 Kcmil

Description:

Stranded copper conductors are insulated with printed XLPE *(type RHW-2)* and configured flat and parallel with green insulated ground and overall PVC jacket applied directly over the conductors with a non-penetrating web.

Application:

Suitable for use within the well casing to supply power to the submersible pump and where extra mechanical protection and flexibility during installation and operation are required.

Standards:

UL Standard 44/854
Temperature Rated at 90°C Wet/Dry
Color Code: Printed Number and Color
Acid, Alkali, Oil, Grease, Abrasion and Crush Resistant
Direct Burial
Weather, Ozone and Sunlight Resistant Jacket
RoHS Compliant

Part Number	Conductor Size *Power* (AWG or Kcmil)	Conductor Size *Ground* (AWG or Kcmil)	Dimensions Insulation (in.)	Dimensions Jacket (in.)	Dimensions O.D. (in.)	Standard Packaging (500')	Standard Packaging (1,000')	Standard Packaging (bulk)	Ampacity NEC§	Weight (lb./1000')
PFB1/03GG	1/03 (19 str)	6 (7 str)	0.080	0.060	0.64 x 1.97			X	170	1,632
PFB2/03GG	2/03 (19 str)	6 (7 str)	0.080	0.060	0.68 x 2.11			X	195	1,958
PFB3/03GG	3/03 (19 str)	4 (7 str)	0.080	0.060	0.73 x 2.30			X	225	2,410
PFB4/03GG	4/03 (19 str)	4 (7 str)	0.080	0.060	0.79 x 2.48			X	260	2,917
PFB250/3GG	250/3 (37 str)	4 (7 str)	0.095	0.080	0.89 x 2.71			X	290	3,387
PFB350/3GG	350/3 (37 str)	3 (7 str)	0.095	0.080	0.99 x 3.03			X	350	4,530
PFB500/3GG	500/3 (37 str)	2 (7 str)	0.095	0.080	1.12 x 3.44			X	430	6,207

§Per NEC Table 310.15 (B)(16). NOTE: The data shown is approximate and subject to standard industry tolerances.

SUBMERSIBLE PUMP CABLE

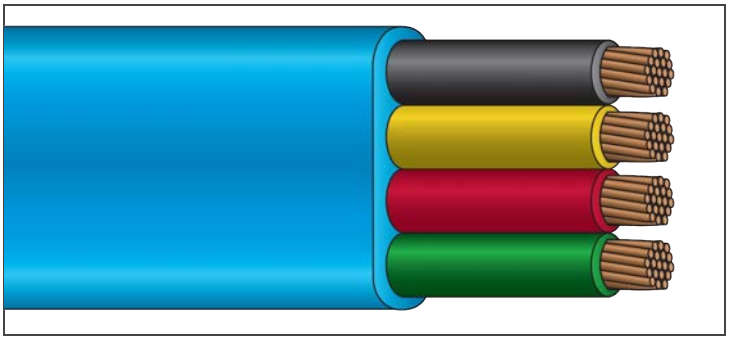

SERVICEBLUE™
TPE/TPE
600 Volt Copper

Description:
Stranded copper conductors are insulated with color coded TPE *(thermoplastic elastomer)* compound and configured flat and parallel with green insulated ground and overall blue TPE jacket applied directly over the conductors with a non-penetrating web.

Application:
Suitable for use within the well casing to supply power to the submersible pump and where extra mechanical protection and flexibility during installation and operation are required.

Standards:
UL Listed: Submersible Pump Cable
Temperature Rated at 75°C
Cold Temperature Rated at -40°C Cold Bend/Cold Impact
Color Code: Black, Red, Yellow, Green *(ground),*
Acid and Alkali Resistant
Weather Resistant Jacket
RoHS Compliant

Part Number	Conductor Size *Power* (AWG)	Conductor Size *Ground* (AWG)	Dimensions Insulation (in.)	Dimensions Jacket (in.)	Dimensions O.D. (in.)	Standard Packaging (500')	Standard Packaging (1,000')	Standard Packaging (bulk)	Ampacity NEC§	Weight (lb./1000')
PCW14/2GG	14 (41 str)	14 (41 str)	0.030	0.030	0.19 x 0.46	X	X		15	105
PCW12/2GG	12 (65 str)	12 (65 str)	0.030	0.030	0.21 x 0.52	X	X		20	132
PCW10/2GG	10 (104 str)	10 (104 str)	0.030	0.030	0.24 x 0.59	X	X		30	173
PCW14/3GG	14 (41 str)	14 (41 str)	0.030	0.030	0.19 x 0.59	X	X		15	105
PCW12/3GG	12 (65 str)	12 (65 str)	0.030	0.030	0.21 x 0.67	X	X		20	144
PCW10/3GG	10 (104 str)	10 (104 str)	0.030	0.030	0.24 x 0.76	X	X		30	203
PCW8/3GG	8 (19 str)	10 (19 str)	0.045	0.040	0.31 x 0.95	X	X		50	321

§Per NEC Table 310.15 (B)(16). NOTE: The data shown is approximate and subject to standard industry tolerances.

servicewire.com

Phoenix, AZ
877-623-9473

Culloden, WV
800-624-3572

Houston, TX
800-231-9473

IRRIGATION CABLE

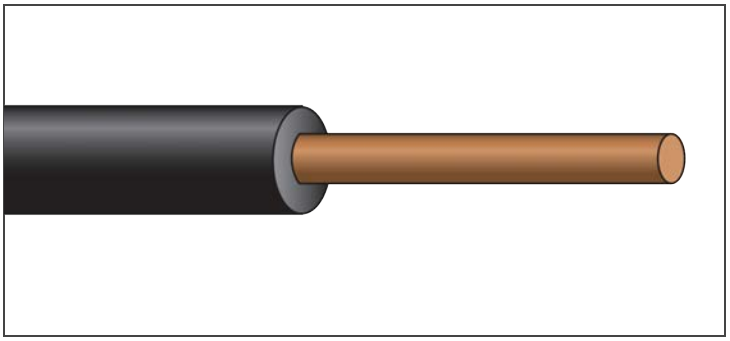

UNDERGROUND FEEDER

Golf Course Sprinkler - PE

600 Volt Copper

Description:

Solid annealed copper conductor insulated with polyethylene.

Application:

Suitable for use as sprinkler irrigation control wire for general purpose lighting, power and control conductors for irrigation systems. For use in accordance per NEC Article 339.

Standards:

UL 493
UL Type ULECC
Temperature Rated at 75°C Wet/Dry
Cold Temperature Rated at -40°C
Acid, Alkali, Grease, Chemical, Abrasion, Crush and Moisture Resistant
Direct Burial
RoHS Compliant

Part Number	Conductor (AWG)	Dimensions Insulation (in.)	Dimensions O.D. (in.)	Standard Packaging (2500')	Weight (lb./1000')
GOLF14	14 (sol)	0.045	0.15	X	19
GOLF12	12 (sol)	0.045	0.17	X	27
GOLF10	10 (sol)	0.045	0.19	X	44

NOTE: The data shown is approximate and subject to standard industry tolerances.

servicewire.com

Phoenix, AZ
877-623-9473

Culloden, WV
800-624-3572

Houston, TX
800-231-9473

IRRIGATION CABLE

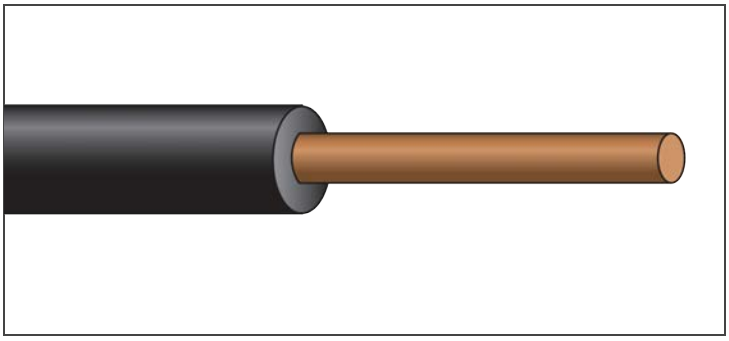

UNDERGROUND FEEDER

UF/Type TWU

600 Volt Copper

ISO 9001:2008 RoHS COMPLIANT Made in the USA REACH

Description:

Solid *(#18 AWG to #8 AWG)* or stranded *(#6 AWG to #2 AWG)*, soft annealed copper conductor insulated with PVC.

Application:

Suitable for use as sprinkler irrigation control wire for general purpose lighting, power and control conductors for irrigation systems. For use in accordance per NEC Article 339.

Standards:

UL 493 and UL1581, CSA C22.2 #75
UL 1493 Type ULECC (*#18 AWG - #16 AWG*)
UL 493 Type UF (*#14 AWG - #8 AWG*)
C(UL) Listed: Type TWU 600V *(#14 AWG - #8 AWG)*
Federal Spec. AA-59544
Temperature Rated at 60°C Wet/Dry
Acid, Alkali, Grease, Chemical, Abrasion, Crush and Moisture Resistant
Direct Burial
RoHS Compliant

Part Number	Conductor (AWG)	Dimensions Insulation (in.)	Dimensions O.D. (in.)	Standard Packaging (500')	Standard Packaging (1000')	Standard Packaging (2500')	Standard Packaging (bulk)	Weight (lb./1000')
ULE18	18 (sol)	0.045	0.13	X		X		13
ULE16	16 (sol)	0.045	0.14	X		X		16
UF14	14 (sol)	0.060	0.18	X	X	X		27
UF12	12 (sol)	0.060	0.20	X		X		36
UF10	10 (sol)	0.060	0.22	X		X		50
UF8	8 (sol)	0.080	0.29			X		82
UF6	6 (7 str)	0.080	0.34				X	120
UF4	4 (7 str)	0.080	0.39				X	175
UF2	2 (7 str)	0.080	0.44				X	258

**UL Listed - Underground Low Energy 150V Circuit Cable Sunlight Resistant. NOTE: The data shown is approximate and subject to standard industry tolerances.*

servicewire.com

Phoenix, AZ
877-623-9473

Culloden, WV
800-624-3572

Houston, TX
800-231-9473

IRRIGATION CABLE

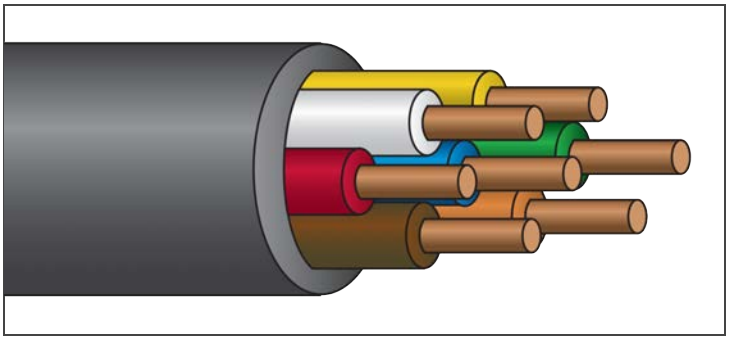

SPRINKLER CONTROL

30 Volt Copper

ISO 9001:2008 RoHS COMPLIANT Made in the USA REACH

Description:

Soft annealed solid copper, insulated with colored PVC, cabled with and jacketed with black HMW-PE *(nylon rip cord under jacket)*.

Application:

Suitable for use as control cable for commercial and residential irrigation systems.

Standards:

UL Listed: Sprinkler Control Cable
Temperature Rated at 60°C Wet/Dry
Acid, Alkali, Grease, Chemical, Abrasion, Crush, Moisture and Sunlight Resistant
Underground Use
RoHS Compliant

Part Number	Conductor Solid (AWG)	Conductor Solid (no.)	Dimensions Insulation (in.)	Dimensions Jacket (in.)	Dimensions O.D. (in.)	Standard Packaging (100')	Standard Packaging (250')	Standard Packaging (500')	Standard Packaging (1000')	Weight (lb./1000')
SPR18/2	18	2	0.02	0.03	0.14 x 0.22		X	X	X	23
SPR18/3	18	3	0.02	0.03	0.23	X	X	X	X	30
SPR18/4	18	4	0.02	0.03	0.25			X		38
SPR18/5	18	5	0.02	0.03	0.27	X	X	X	X	47
SPR18/6	18	6	0.02	0.03	0.30			X		55
SPR18/7	18	7	0.02	0.03	0.30	X	X	X	X	62
SPR18/8	18	8	0.02	0.03	0.33		X	X		71
SPR18/9	18	9	0.02	0.03	0.35					79
SPR18/10	18	10	0.02	0.03	0.37	X	X	X	X	87
SPR18/12	18	12	0.02	0.03	0.39					103
SPR18/13	18	13	0.02	0.03	0.40		X	X	X	110

NOTE: The data shown is approximate and subject to standard industry tolerances.

servicewire.com

Phoenix, AZ
877-623-9473

Culloden, WV
800-624-3572

Houston, TX
800-231-9473

IRRIGATION CABLE

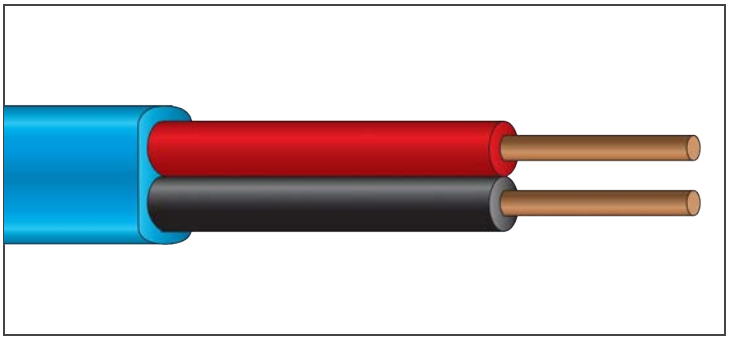

DECODER CONTROL

HD-PE Jacketed UF or TWU

Copper

Description:

Two solid copper conductors, insulated with 60 mils of flame retardant PVC. Cable jacketed with moisture resistant HD-PE jacket in various colors.

Application:

Suitable for use in Irrigation Control Circuits.

Standards:

UL 493 *(conductors)*
ICEA S-61-402/NEMA WC-5
Sunlight Resistant
Direct Burial
Color Code: Black and Red
RoHS Compliant

Part Number	Conductors (no.)	Strands (no.)	Insulation Thickness (mils)	Jacket Thickness (mils)	Diameter (in.)	Approx. Net Weight (lb./1000')
DEC 14/2	2	1	60	35	0.25 x 0.44	72
DEC 12/2	2	1	60	35	0.27 x 0.47	92

NOTE: The data shown is approximate and subject to standard industry tolerances.

servicewire.com

Phoenix, AZ
877-623-9473

Culloden, WV
800-624-3572

Houston, TX
800-231-9473

IRRIGATION CABLE

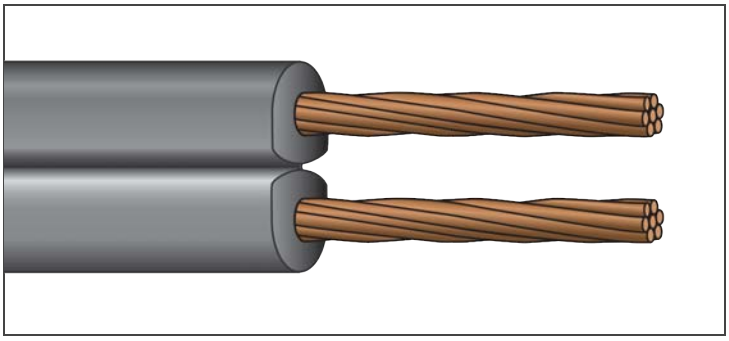

LANDSCAPE LIGHTING

ULECC or LVLL

30 Volt Copper

Description:

Extra flexible stranded copper conductors, configured flat and parallel with black PVC jacket. Conductors identified with ridges on the surface of the insulation.

Application:

Suitable for use in direct burial landscaping and lighting applications.

Standards:

ASTM Standards: B-174 *(#16 AWG - #10 AWG),* B-172 *(#8 AWG)*
UL 1493
Temperature Rated at 60°C Wet/Dry
Acid, Alkali, Grease, Chemical, Abrasion, Crush, Oil, Moisture, Sunlight and Abrasion Resistant
Direct Burial
RoHS Compliant

Part Number	Conductor Solid (AWG)	Conductor Solid (no.)	Dimensions Insulation (in.)	Dimensions O.D (in.)	Standard Packaging (100')	Standard Packaging (250')	Standard Packaging (500')	Standard Packaging (1,000')	Weight (lb./1000')
ULE16/2	16/2	26	0.045	0.30 x 0.15			X		34
ULE14/2	14/2	41	0.045	0.33 x 0.16	X		X		46
ULE12/2	12/2	65	0.045	0.30 x 0.18	X	X	X	X	64
ULE10/2	10/2	104	0.045	0.41 x 0.21	X	X	X	X	91
ULE8/2	8/2	168	0.060	0.53 x 0.26	X		X		147

NOTE: The data shown is approximate and subject to standard industry tolerances.

servicewire.com

Phoenix, AZ
877-623-9473

Culloden, WV
800-624-3572

Houston, TX
800-231-9473

IRRIGATION CABLE

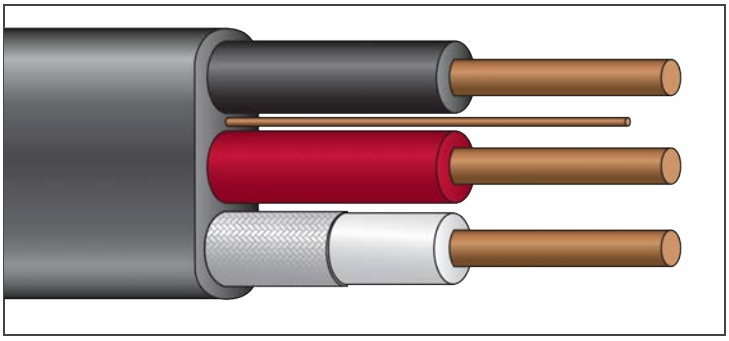

UNDERGROUND FEEDER

UF-B

600 Volt Copper

ISO 9001:2008 RoHS COMPLIANT Made in the USA REACH

Description:

Solid or stranded *(type THHN/THWN)* conductors are laid parallel with an uninsulated grounding conductor, with overall outer PVC jacket.

Application:

Permitted for use underground including direct burial in earth as Feeder or Branch Circuit Cable where provided with overcurrent protection. Suitable for use in interior wiring in wet, dry or corrosive locations under recognized wiring methods of the National Electrical Code *(NEC)*. Acceptable for installation as a Non-Metallic Sheathed Cable in accordance with NEC Article 339-3 (4). Acceptable for use in accordance with NEC Articles 300-4(b) and 339

Standards:

UL 493
Temperature Rated at 75°C Wet/Dry
Grease and Chemical Resistant
Moisture, Chemical and Sunlight Resistant

Part Number	Size (AWG)	Dimensions PVC (in.)	Dimensions Nylon (in.)	Dimensions O.D. (in.)	Standard Packaging (250')	Standard Packaging (500')	Standard Packaging (1,000')	Ampacity NEC§	Weight (lb./1000')
UFB14/2G	14 (sol)	0.015	0.004	0.19 x 0.39				20	53
UFB12/2G	12 (sol)	0.015	0.004	0.20 x 0.42	X	X	X	20	75
UFB10/2G	10 (sol)	0.020	0.004	0.23 x 0.46	X		X	30	140
UFB8/2G	8 (7 str)	0.030	0.005	0.32 x 0.62			X	40	213
UFB6/2G	6 (7 str)	0.030	0.005	0.39 x 0.80			X	55	305
UFB14/3G	14 (sol)	0.015	0.004	0.19 x 0.58				20	93
UFB12/3G	12 (sol)	0.015	0.004	0.20 x 0.62	X		X	20	134
UFB10/3G	10 (sol)	0.020	0.004	0.23 x 0.69	X	X	X	30	194
UFB8/3G8	8 (7 str)	0.030	0.005	0.32 x 0.99		X	X	40	330
UFB6/3G6	6 (7 str)	0.030	0.005	0.39 x 1.20			X	55	449

§Per NEC Table 310.15 (B)(16). NOTE: The data shown is approximate and subject to standard industry tolerances.

CONTACT WIRE

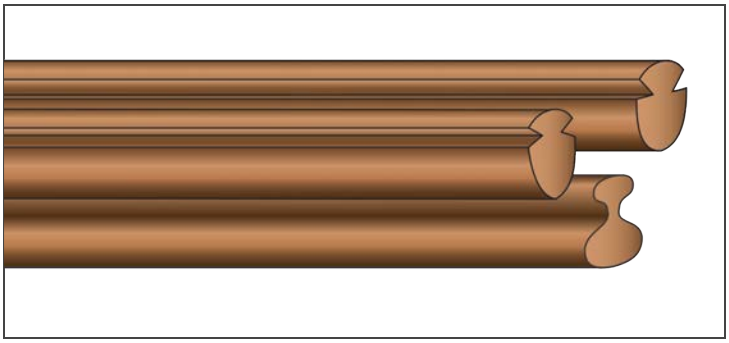

COPPER

(for Electrified Rail Systems)

Description:

Single conductor, solid copper, having a hard drawn temper, made in the configuration of grooved, figure 8 or figure 9.

Application:

Suitable for use as an overhead power source for electric railroad locomotives, cranes, light rail transit systems and underground mining motor cars.

Standards:

ASTM Standards: B-47, B-116
RoHS Compliant

Part Number	Nominal Conductor Size (AWG or Kcmil)	Overall Diameter (in.)	Overall Diameter (mm)	Area Circular (mils)	Area Square (in.)	Area Square (mm)	Weight (lb./1000')	Weight (lb./mile)	Weight (kg/km)	Tensile Strength *(Minimum)* (lb./sq. in.)	Tensile Strength *Minimum* (kg/sq. mm)	Resistance *(68°F/20°C)* OHMS/1000'	Resistance *(68°F/20°C)* OHMS/mile	Resistance *(68°F/20°C)* OHMS/km	Minimum Breaking Strength (lb.)	Minimum Breaking Strength (kg)
BGRV2/0CU	2/0	0.392	9.956	137,900	0.108	69.9	417.4	2,204	621	50,200	35.3	0.077	0.409	0.254	5,437	2,466
BGRV3/0CU	3/0	0.430	10.922	167,300	0.131	84.8	506.4	2,674	753	48,500	34.1	0.064	0.337	0.209	6,373	2,891
BGRV4/0CU	4/0	0.482	12.243	212,000	0.167	107.4	641.7	3,388	955	46,600	32.8	0.050	0.266	0.165	7,759	3,519
BGRV300CU	300	0.574	14.580	299,800	0.236	151.9	907.5	4,792	1,350	44,200	31.1	0.036	0.188	0.117	10,410	4,722
BGRV350CU	350	0.620	15.748	351,200	0.276	177.9	1,063.0	5,613	1,582	42,800	30.1	0.030	0.161	0.100	11,810	5,357
BFIG81/0CU	1/0	0.420x0.312	10.7x7.9	105,600	0.083	53.5	319.7	1,687	475	51,800	36.4	0.101	0.534	0.332	4,296	1,949
BFIG82/0CU	2/0	0.480x0.352	12.2x8.9	133,100	0.105	67.4	402.9	2,127	599	50,200	35.3	0.080	0.424	0.263	5,248	2,380
BFIG83/0CU	3/0	0.510x0.400	13.7x10.2	167,800	0.132	85.0	507.9	2,682	755	48,500	34.1	0.064	0.336	0.209	6,392	2,899
BFIG84/0CU	4/0	0.600x0.450	15.2x11.1	211,600	0.166	107.2	640.5	3,382	953	46,600	32.8	0.051	0.266	0.166	7,744	3,513
BFIG8350CU	350	0.754x0.570	19.2x14.5	350,100	0.275	177.4	1,060.0	5,595	1,577	42,800	30.1	0.031	0.161	0.100	11,770	5,339
BFIG9350CU	350	0.707x0.496	17.9x12.6	348,900	0.274	176.8	1,056.0	5,576	1,571	42,800	30.1	0.031	0.162	0.100	11,730	5,321
BFIG9400CU	400	0.715x0.522	18.9x14.0	397,200	0.312	201.3	1,202.0	6,348	1,789	41,300	29.0	0.027	0.142	0.088	12,880	5,842

NOTE: The data shown is approximate and subject to standard industry tolerances.

servicewire.com

Phoenix, AZ
877-623-9473

Culloden, WV
800-624-3572

Houston, TX
800-231-9473

CONTACT WIRE

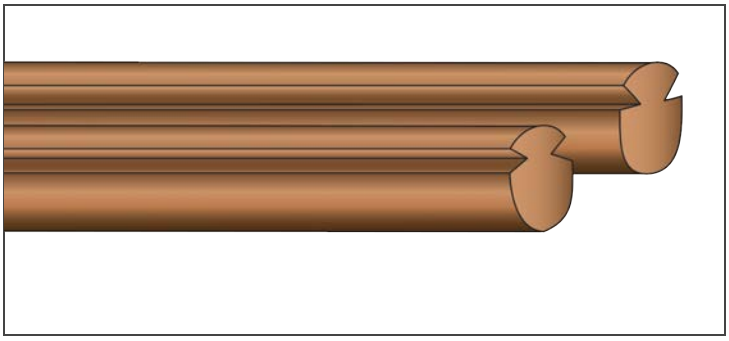

BRONZE-MAGNESIUM

(for Electrified Rail Systems)

Description:

Single conductor, solid magnesium, having a hard drawn temper, made in the configuration of grooved.

Application:

Overhead catenary system used as power for light rail systems, cranes, electric railroad locomotives and underground mining cars.

Standards:

ASTM B-9
RoHS Compliant

Part Number	Nominal Conductor Size (AWG or Kcmil)	Overall Diameter (in.)	Overall Diameter (mm)	Area Circular (mils)	Area Square (in.)	Area Square (mm)	Weight (lb./1000')	Weight (lb./mile)	Weight (kg/km)	Tensile Strength *Minimum* (lb./sq. in.)	Tensile Strength *Minimum* (kg/sq. mm)	Resistance *(68°F/20°C)* OHMS/1000'	Resistance *(68°F/20°C)* OHMS/ Mile	Resistance *(68°F/20°C)* OHMS/ KM	Min. Breaking Strength (lb)	Min. Breaking Strength (kg)
BGRV2/0MG80	2/0	0.392	9.957	137,948	0.108	69.9	430	2,272	640.46	76,362	53.69	0.101	0.532	0.331	7,012	3,180
BGRV3/0MG80	3/0	0.430	10.922	167,353	0.131	84.8	522	2,757	776.98	62,945	44.25	0.083	0.439	0.273	8,506	3,858
BGRV4/0MG80	4/0	0.459	11.670	211,165	0.166	107.0	659	3,477	980.00	63,820	44.87	0.066	0.348	0.216	10,274	4,660
BGRV300MG80	300	0.544	13.820	296,025	0.233	150.0	923	4,875	1,374.00	60,919	42.83	0.047	0.248	0.154	13,735	6,230
BGRV350MG80	350	0.620	15.748	351,200	0.276	166.3	1,063	5,613	1,582.00	59,500	41.80	0.037	0.195	0.121	16,410	7,414
BGRV2/0MG55	2/0	0.392	9.957	137,948	0.108	69.9	430	2,272	640.46	86,325	60.69	0.134	0.709	0.441	7,936	3,600
BGRV3/0MG55	3/0	0.430	10.922	167,353	0.131	84.8	522	2,757	776.98	71,157	50.03	0.111	0.585	0.363	9,628	4,367
BGRV4/0MG55	4/0	0.459	11.670	211,165	0.166	107.0	659	3,477	980.00	72,525	50.99	0.082	0.431	0.268	11,667	5,292
BGRV300MG55	300	0.544	13.820	296,025	0.233	150.0	923	4,875	1,374.00	68,172	47.93	0.058	0.307	0.191	15,377	6,975
BGRV350MG55	350	0.620	15.748	351,200	0.276	166.3	1,063	5,613	1,582.00	62,500	43.90	0.054	0.283	0.176	17,240	7,820
BFIG9335MG55	336.4	680x.482	17.3x12.2	336,400	0.264	170.4	1,018	5,377	1,515.00	61,500	43.20	0.056	0.296	0.184	16,250	7,371

NOTE: The data shown is approximate and subject to standard industry tolerances.

servicewire.com

Phoenix, AZ
877-623-9473

Culloden, WV
800-624-3572

Houston, TX
800-231-9473

CONTACT WIRE

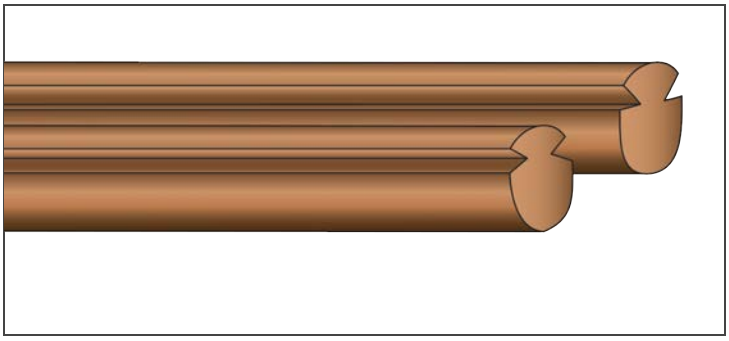

BRONZE-TIN

(for Electrified Rail Systems)

Description:

Single conductor, solid tin, having a hard drawn temper, made in the configuration of grooved.

Application:

Overhead catenary system used as power for light rail systems, cranes, electric railroad locomotives and underground mining cars.

Standards:

ASTM B-9
RoHS Compliant

Part Number	Nominal Conductor Size (AWG or Kcmil)	Overall Diameter (in.)	Overall Diameter (mm)	Area Circular (mils)	Area Square (in.)	Area Square (mm)	Weight (lb./1000')	Weight (lb./mile)	Weight (kg/km)	Tensile Strength *Minimum* (lb./sq. in.)	Tensile Strength *Minimum* (kg/sq. mm)	Resistance *(68°F/20°C)* OHMS/1000'	Resistance *(68°F/20°C)* OHMS/Mile	Resistance *(68°F/20°C)* OHMS/KM	Min. Breaking Strength (lb.)	Min. Breaking Strength (kg)
BGRV2/0SN80	2/0	0.376	9.557	137,900	0.108	69.9	417.4	2,204	621.0	69,000	48.50	0.094	0.496	0.309	7,473	3,390
BGRV3/0SN80	3/0	0.430	10.922	167,300	0.131	84.8	506.0	2,674	753.0	67,000	47.10	0.077	0.409	0.254	8,804	3,993
BGRV4/0SN80	4/0	0.459	11.670	211,165	0.166	107.0	661.0	3,488	983.0	63,820	44.87	0.070	0.372	0.231	10,274	4,660
BGRV300SN80	300	0.544	13.820	296,025	0.233	150.0	926.0	4,889	1,378.0	60,919	42.83	0.050	0.266	0.165	13,735	6,230
BGRV350SN80	350	0.620	15.748	351,200	0.276	166.3	1,063.0	5,613	1,582.0	59,500	41.80	0.037	0.195	0.121	16,410	7,414
BFIG9335SN80	336.4	0.680x0.482	17.3x12.2	336,400	0.264	170.4	1,018.0	5,377	1,515.0	56,800	39.90	0.039	0.205	0.127	15,010	6,809

NOTE: The data shown is approximate and subject to standard industry tolerances.

servicewire.com

Phoenix, AZ
877-623-9473

Culloden, WV
800-624-3572

Houston, TX
800-231-9473

CONTACT WIRE

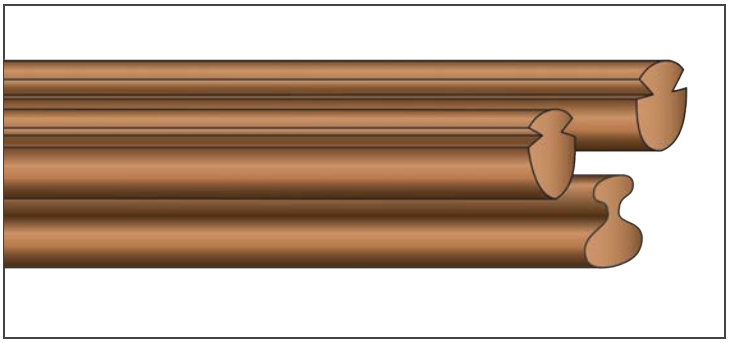

SILVER-BEARING

(for Electrified Rail Systems)

ISO 9001:2008 RoHS COMPLIANT Made in the USA REACH

Description:

Single conductor, silver-bearing, having a hard drawn temper, made in the configuration of grooved.

Application:

Overhead catenary system used as power for light rail systems, cranes, electric railroad locomotives and underground mining cars.

Standards:

ASTM Standards: B-47, B-116
RoHS Compliant

Part Number	Nominal Conductor Size (AWG or Kcmil)	Overall Diameter (in.)	Overall Diameter (mm)	Area Circular (mils)	Area Square (in.)	Area Square (mm)	Weight (lb./1000')	Weight (lb./mile)	Weight (kg/km)	Tensile Strength *Minimum* (lb./sq. in.)	Tensile Strength *Minimum* (kg/sq. mm)	Resistance *(68°F/20°C)* OHMS/1000'	Resistance *(68°F/20°C)* OHMS/mile	Resistance *(68°F/20°C)* OHMS/km	Minimum Breaking Strength (lb.)	Minimum Breaking Strength (kg)
BGRV2/0AG	2/0	0.392	9.957	137,900	0.108	69.9	418.0	2,205	621	53,000	37.3	0.077	0.409	0.254	5,740	2,600
BGRV3/0AG	3/0	0.430	10.922	167,300	0.131	84.8	506.0	2,674	755	52,700	37.1	0.064	0.337	0.209	6,920	3,140
BGRV4/0AG	4/0	0.482	12.243	212,000	0.167	107.4	642.0	3,389	955	51,300	36.1	0.050	0.266	0.165	8,540	3,870
BGRV300AG	300	0.574	14.580	299,800	0.236	151.9	908.0	4,792	1,350	48,000	33.7	0.036	0.188	0.117	11,300	5,130
BGRV350AG	350	0.620	15.748	351,200	0.276	177.9	1,063.0	5,613	1,581	44,600	31.4	0.030	0.161	0.100	12,300	5,580
BFIG81/0AG	1/0	0.420x0.312	10.7x7.9	105,600	0.083	53.5	319.7	1,687	475	51,800	36.4	0.101	0.534	0.332	4,296	1,949
BFIG82/0AG	2/0	0.480x0.352	12.2x8.9	133,100	0.105	67.4	402.9	2,127	599	50,200	35.3	0.080	0.424	0.263	5,248	2,380
BFIG83/0AG	3/0	0.510x0.400	13.7x10.2	167,800	0.132	85.0	507.9	2,682	755	48,500	34.1	0.064	0.336	0.209	6,392	2,899
BFIG84/0AG	4/0	0.600x0.450	15.2x11.1	211,600	0.166	107.2	640.5	3,382	953	46,600	32.8	0.051	0.266	0.166	7,744	3,513
BFIG8350AG	350	0.754x0.570	19.2x14.5	350,100	0.275	177.4	1,060.0	5,595	1,577	42,800	30.1	0.031	0.161	0.100	11,770	5,339
BFIG9350AG	350	0.707x0.496	17.9x12.6	348,900	0.274	176.8	1,056.0	5,576	1,571	42,800	30.1	0.031	0.162	0.100	11,730	5,321
BFIG9400AG	400	0.715x0.552	18.9x14.0	397,200	0.312	201.3	1,202.0	6,348	1,789	41,300	29.0	0.027	0.142	0.088	12,880	5,842

NOTE: The data shown is approximate and subject to standard industry tolerances.

servicewire.com

Phoenix, AZ
877-623-9473

Culloden, WV
800-624-3572

Houston, TX
800-231-9473

MESSENGERS FOR AERIAL CABLES

COPPERWELD - EHS, 30% Conductivity

MES(size)CUWELD	Size	O.D.	Stranding (no.)	Breaking Strength	Weight (lb/1000')
MES1/4CUWELD	1/4"	0.242	7	5,783 lbs.	128
MES5/16CUWELD	5/16"	0.306	7	9,196 lbs.	204
MES3/8CUWELD	3/8"	0.385	7	13,890 lbs.	324
MES1/2CUWELD	1/2"	0.486	7	20,460 lbs.	515
MES9/16CUWELD	9/16"	0.546	7	24,650 lbs.	650

GALVANIZED - EHS

MES(size)EHSGAL	Size	O.D.	Stranding (no.)	Breaking Strength	Weight (lb/1000')
MES1/4EHSGAL	1/4"	0.242	7	6,650 lbs.	121
MES5/16EHSGAL	5/16"	0.306	7	11,200 lbs.	205
MES3/8EHSGAL	3/8"	0.385	7	15,400 lbs.	273
MES1/2EHSGAL	1/2"	0.486	7	26,900 lbs.	517

STAINLESS STEEL - Type "302"

MES(size)SS	Size	O.D.	Stranding (no.)	Breaking Strength	Weight (lb/1000')
MES1/4SS	1/4"	0.242	7	6,650 lbs.	135
MES3/8SS	3/8"	0.385	7	18,000 lbs.	282
MES1/2SS	1/2"	0.486	7	33,700 lbs.	535

Note: The data shown is approximate and subject to standard industry tolerances.

Service Wire Company believes the information presented herein is, to the best of our knowledge, true and accurate based on currently available industry data. However no warranties, either expressed or implied, are made as to the accuracy or completeness of any information contained herein. Consequently, Service Wire Company makes no guarantee of the results and assumes no obligation or liability whatsoever in connection with this information.

COMMON COLOR CODES

ICEA Method 1 Table E-1 ("K1")
(Colored Compounds with Stripes)

Conductor Number	Conductor Color	Stripe Color
1	Black	-
2	White	-
3	Red	-
4	Green	-
5	Orange	-
6	Blue	-
7	White	Black
8	Red	Black
9	Green	Black
10	Orange	Black
11	Blue	Black
12	Black	White
13	Red	White
14	Green	White
15	Blue	White
16	Black	Red
17	White	Red
18	Orange	Red
19	Blue	Red
20	Red	Green
21	Orange	Green

ICEA Method 1 Table E-2 (“K2”)
(Colored Compounds with Stripes)

Conductor Number	Conductor Color	Stripe Color
1	Black	-
2	Red	-
3	Blue	-
4	Orange	-
5	Yellow	-
6	Brown	-
7	Red	Black
8	Blue	Black
9	Orange	Black
10	Yellow	Black
11	Brown	Black
12	Black	Red
13	Blue	Red
14	Orange	Red
15	Yellow	Red
16	Brown	Red
17	Black	Blue
18	Red	Blue
19	Orange	Blue
20	Yellow	Blue
21	Brown	Blue

ICEA Method 4
(Black Compound with Numbers)

Conductor Number	Printing
1	1-One
2	2-Two
3	3-Three
4	4-Four
5	5-Five
6	6-Six
7	7-Seven
8	8-Eight
9	9-Nine
10	10-Ten
11	11-Eleven

Conductor Number	Printing
12	12-Twelve
13	13-Thirteen
14	14-Fourteen
15	15-Fifteen
16	16-Sixteen
17	17-Seventeen
18	18-Eighteen
19	19-Nineteen
20	20-Twenty
21	21-Twenty-One

Service Wire Company believes the information presented herein is, to the best of our knowledge, true and accurate based on currently available industry data. However no warranties, either expressed or implied, are made as to the accuracy or completeness of any information contained herein. Consequently, Service Wire Company makes no guarantee of the results and assumes no obligation or liability whatsoever in connection with this information.

MINIMUM BENDING RADII FOR CABLES

Insulated Conductor Without Metallic Shielding or Armor

Overall Conductor Diameter (inches)	Minimum Bending Radius as a Multiple of Cable Diameter
1.000" & less	4
1.001" - 2.000"	5
2.001" & over	6

Power and Control Cables With Metallic Shielding and/or Armor

Cable Description	Minimum Bending Radius as a Multiple of Cable Diameter
Interlocked Armor (with non-shielded conductors)	7
Metallic Tape Shielded (conductors or cable)	12/7[1]

(1) 12 x individual shielded conductor diameter, or 7 x overall cable diameter, whichever is greater
Above tables per ICEA S-95-658/NEMA WC70, Appendix F

Service Wire Company believes the information presented herein is, to the best of our knowledge, true and accurate based on currently available industry data. However no warranties, either expressed or implied, are made as to the accuracy or completeness of any information contained herein. Consequently, Service Wire Company makes no guarantee of the results and assumes no obligation or liability whatsoever in connection with this information.

MAXIMUM PULLING TENSIONS

Pulling Eyes Method

Maximum pulling tension for use with a pulling eye can be determined from the following formula:

Tmax = k x n x CA

Where:

k =	0.008 for copper
	0.006 for aluminum
n =	number of conductors
CA =	conductor area of one conductor, in circular mils

Tmax should not exceed 6,000 lb. for a single conductor cable.
Tmax should not exceed 10,000 lb. for 2 or more conductors.

Pulling Grip Method

Maximum pulling tension when using a basket type grip should not exceed 1,000 lb. or the value determined in the above formula, whichever is smaller.

Notes:

1. ***Do not exceed the load stated by the manufacturer of the pulling device.***
2. ***Do not consider the area of neutral or grounding conductors in cable(s) when calculating maximum pulling tensions.***
3. ***Pulling tensions should be reduced by 20% to 40% when several conductors are being pulled simultaneously (in parallel) since the tension will not be distributed evenly among conductors.***
4. ***The above procedure pertains to straight pulls, and does not consider side wall loading.***

Service Wire Company believes the information presented herein is, to the best of our knowledge, true and accurate based on currently available industry data. However no warranties, either expressed or implied, are made as to the accuracy or completeness of any information contained herein. Consequently, Service Wire Company makes no guarantee of the results and assumes no obligation or liability whatsoever in connection with this information.

SHEAVE SELECTION

Maximum Cable Diameter per Sheave

Sheave Diameter (Inches)	Single/Multi Conductor Power (Inches)	Armor (Inches)	Control Cable (Inches)	Shielded 600 Volt Power (Inches)	MV Power Shielded (Inches)
6	0.375	0.214	0.150	0.107	0.125
12	0.984	0.563	0.940	0.281	0.328
18	1.750	1.000	0.700	0.500	0.583
24	2.453	1.402	0.981	0.701	0.818

Examples of Minimum Bend Radii

600 Volt Cable	Multiply	Sample Diameter	Calculation	Resulting Minimum Bend Radii
Less than 1"	4	0.75" O.D.	4 X 0.75	3" Radius
1" - 2"	5	1.5" O.D.	5 X 1.5	7.5" Radius
2" or Larger	6	3.0" O.D.	6 X 3	18" Radius
Interlocked Armor	7	3.0" O.D.	7 X 3	21" Radius

Notes: *1.) You must select the sheave by radius NOT diameter.*

2.) Sidewall limits for most cables are 500 lbs. per foot radius maximum.

3.) All tensions on a cable pull are additive.

Pull considerations:

1. Plan direction of cable pulls to minimize tension by putting as many bends as possible early in the pull.
2. Proper setups cost initially, but will save by creating safer and easier pulls.
3. Published allowable conductor tensions are for STRAIGHT PULLS ONLY.
4. Published allowable equipment loading does not apply to the sidewall pressure of the cable pull.

Service Wire Company believes the information presented herein is, to the best of our knowledge, true and accurate based on currently available industry data. However no warranties, either expressed or implied, are made as to the accuracy or completeness of any information contained herein. Consequently, Service Wire Company makes no guarantee of the results and assumes no obligation or liability whatsoever in connection with this information.

CABLE INSTALLATION TIPS

Sheave strength ratings are for straight pulls only. Always refer to allowable tensions for each radius.
Most single and conveyor sheaves are rated at 4,000 lbs or more, but these ratings can only be used for the pulling rope, not the cable. Single sheaves are best for guiding and supporting cable. For cable bends use conveyor sheave assemblies to control sidewall pressure.

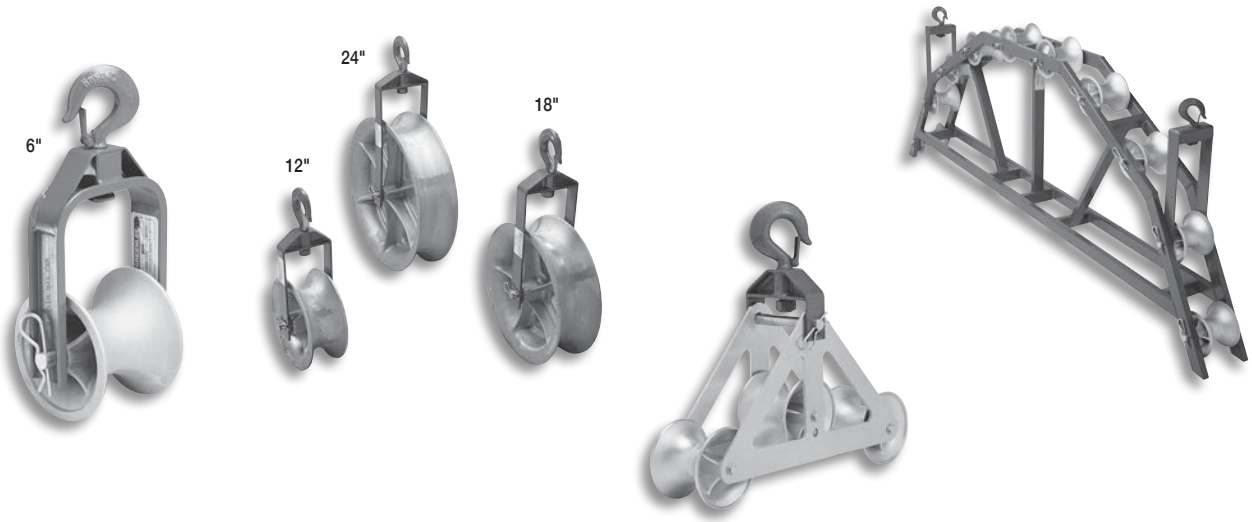

Cable damage can occur when too small of a radius wheel is used.

NOTE: When using conveyor sheave equipment, it is critical for set up that the lead and exit sheaves not have a bending radius smaller than the center wheels. (see below left)

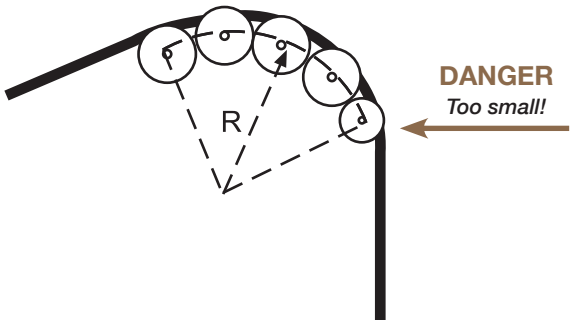

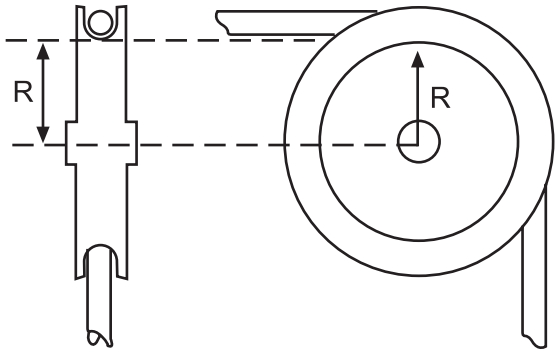

Don't confuse the diameter of the sheave with the radius. The radius MUST match the cable's bending radius.

Service Wire Company believes the information presented herein is, to the best of our knowledge, true and accurate based on currently available industry data. However no warranties, either expressed or implied, are made as to the accuracy or completeness of any information contained herein. Consequently, Service Wire Company makes no guarantee of the results and assumes no obligation or liability whatsoever in connection with this information.

CABLE INSTALLATION TIPS

Stringing Aerial Cables on Poles *(applies to pulling in or out)*

IMPROPER: This method can cause sidewall pressure and crush the cable.

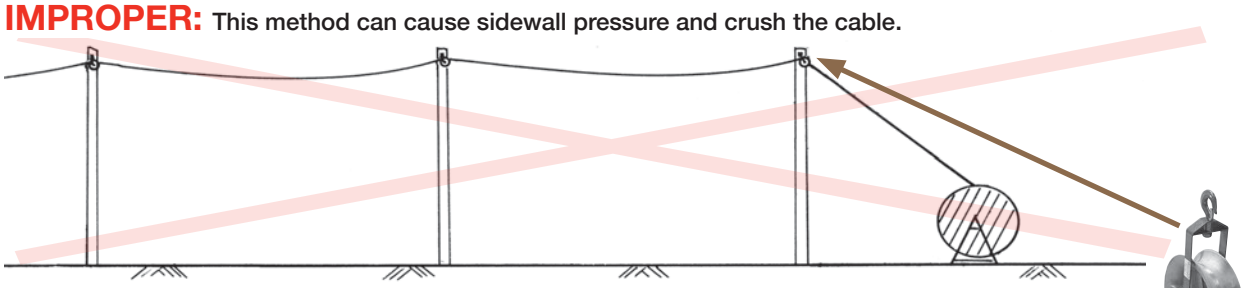

PROPER: Create a smooth radius with sheaves using temporary messengers and proper spacing.
This method will support and distribute all bearing loads for successful cable installation.

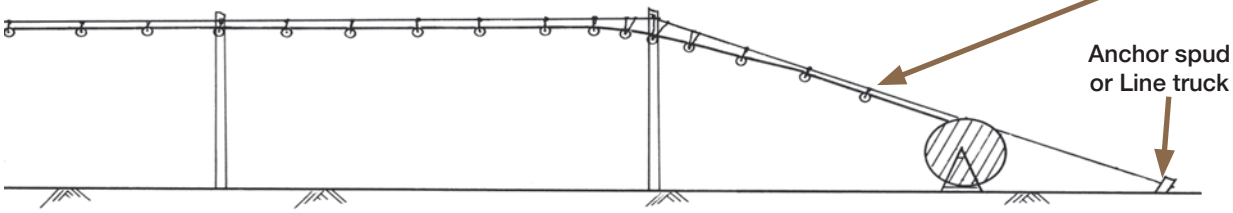

Loading Cable Into Tray

IMPROPER: This method can cause sidewall pressure and crush the cable at the leading point.
Lack of rollers will increase drag creating more tension.

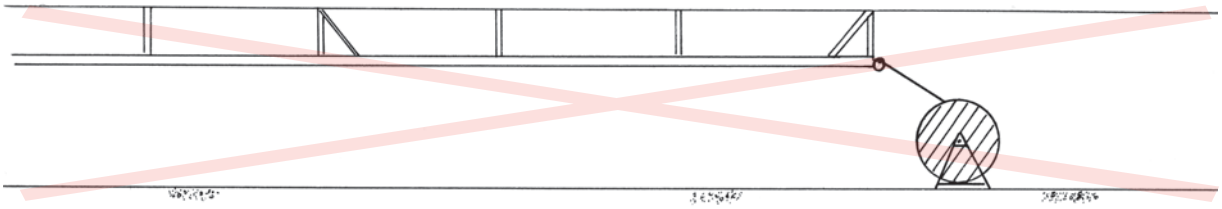

PROPER: Use a large multi-wheel conveyor to distribute sidewall pressure.
Lead and exit wheels must meet minimum cable bend. Use tray rollers to eliminate cable drag.

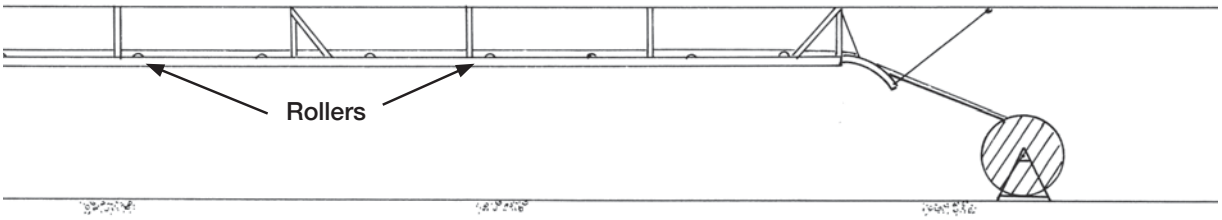

Service Wire Company believes the information presented herein is, to the best of our knowledge, true and accurate based on currently available industry data. However no warranties, either expressed or implied, are made as to the accuracy or completeness of any information contained herein. Consequently, Service Wire Company makes no guarantee of the results and assumes no obligation or liability whatsoever in connection with this information.

TRAY ROLLER ASSEMBLY

- It is important that these assemblies be aligned and secure.
- Shifting of roller assemblies can cause the cable to climb over sheave edge and cut the cable.
- All rollers to be free rolling to eliminate friction.
- Space tray rollers to minimize cable drag.
- Use greater bending radii than allowed.

GOOD
(but cable can drag)

GOOD
(for tray defection)

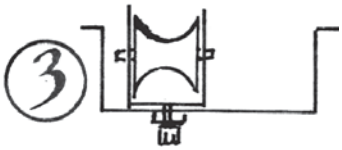

BETTER
(reduces cable drag)

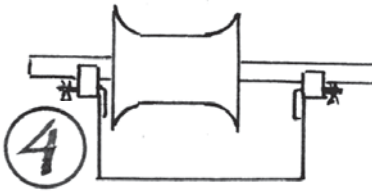

BEST
(with more elevation)

For Cable Loading and Corners

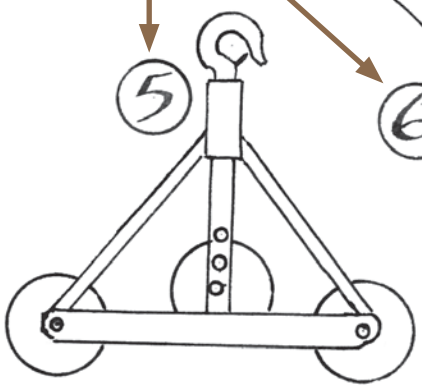

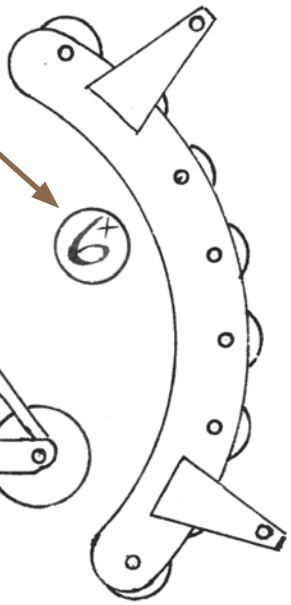

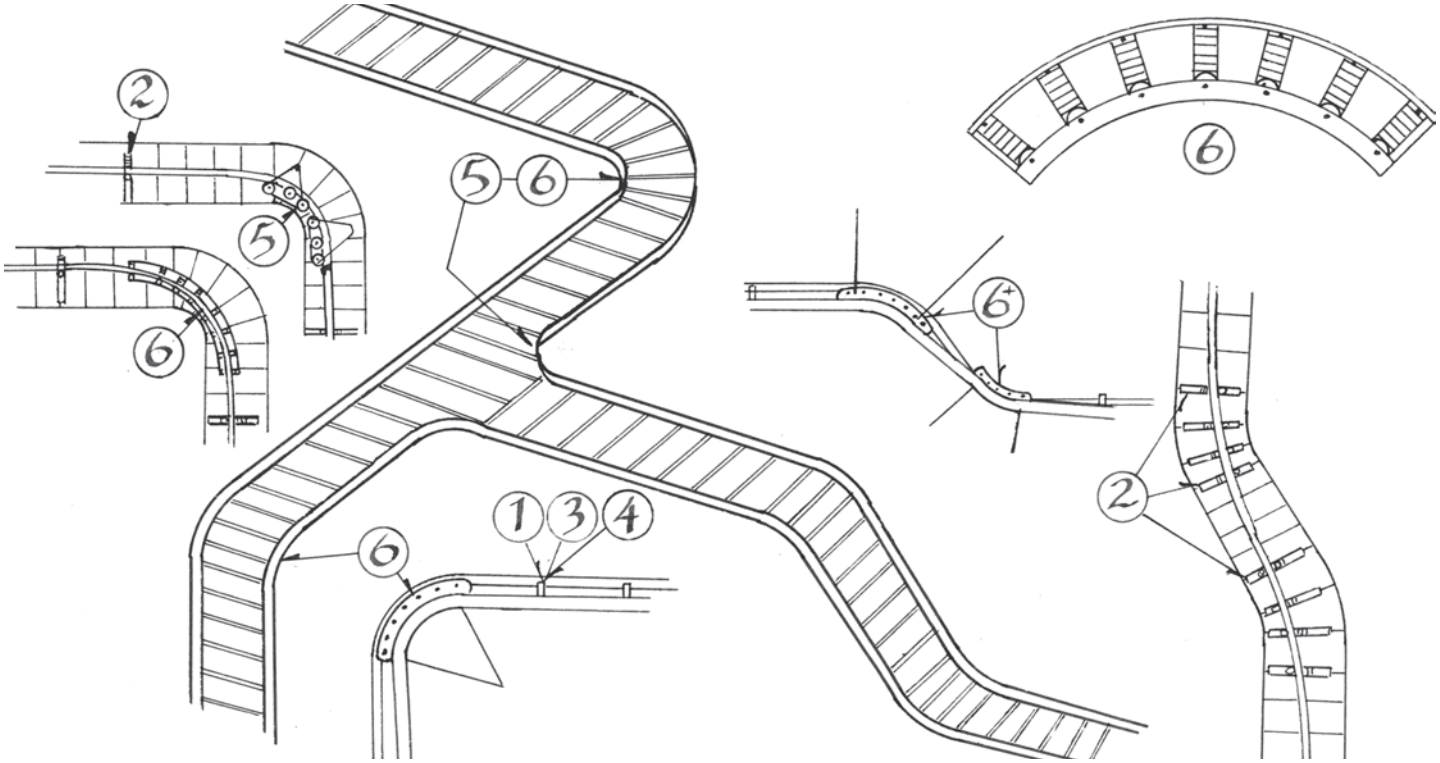

Service Wire Company believes the information presented herein is, to the best of our knowledge, true and accurate based on currently available industry data. However no warranties, either expressed or implied, are made as to the accuracy or completeness of any information contained herein. Consequently, Service Wire Company makes no guarantee of the results and assumes no obligation or liability whatsoever in connection with this information.

USEFUL CONVERSION FACTORS

AWG to Metric

AWG	MM²	CMIL	Diameter (Inches)
22	0.32	640	0.029
20	0.52	1,020	0.036
18	0.82	1,620	0.046
16	1.31	2,580	0.058
14	2.08	4,110	0.073
12	3.31	6,530	0.092
10	5.26	10,380	0.116
9	6.63	13,090	0.130
8	8.38	16,510	0.146
6	13.20	26,240	0.184
4	21.20	41,740	0.232
3	26.70	52,620	0.260
2	33.60	66,360	0.292
1	42.40	83,690	0.332
1/0	53.50	105,600	0.373
2/0	67.40	133,100	0.419
3/0	85.00	167,800	0.470
4/0	107.00	211,600	0.528

Kcmil	MM²	CMIL	Diameter (Inches)
250	126.00	250,000	0.575
300	152.00	300,000	0.630
350	177.00	350,000	0.681
400	202.00	400,000	0.728
500	253.00	500,000	0.813
550	278.00	550,000	0.855
600	304.00	600,000	0.893
700	354.00	700,000	0.964
750	380.00	750,000	0.998
900	456.00	900,000	1.094
1,000	506.00	1,000,000	1.152

Miscellaneous Conversions

Unit	Multiply By	To Get
Centimeters	0.3937	Inches
Circular Mils	0.7854	Square Mils
Cubic Centimeters	5.0671×10^{-4}	Square Millimeters
Cubic Centimeters	0.0610	Cubic Inches
Cubic Inches	16.386	Cubic Centimeters
Inches	2.54	Centimeters
Kilograms	2.2046	Pounds
Kilograms/Kilometer	0.6720	Pounds/1000'
Kilometers	0.6214	Miles
Kilometers	3280.8	Feet
Meters	3.2808	Feet
Mils	0.001	Inches
Mils	0.0254	Millimeters
Miles	1.609	Kilometers
Millimeters	0.03937	Inches
OHMS/Kilometer	0.3048	OHMS/1000'
OHMS/1000'	3.2808	OHMS/Kilometer
Pounds	0.4536	Kilograms
Pounds/1000'	1.4881	Kilograms/Kilometer
Square Centimeters	1.55×10^{5}	Square Mils
Square Centimeters	1.97×10^{5}	Circular Mils
Square Inches	1.2732×10^{6}	Circular Mils
Square Inches	645.16	Square Millimeter
Square Millimeters	1,973.5	Circular Mils

Service Wire Company believes the information presented herein is, to the best of our knowledge, true and accurate based on currently available industry data. However no warranties, either expressed or implied, are made as to the accuracy or completeness of any information contained herein. Consequently, Service Wire Company makes no guarantee of the results and assumes no obligation or liability whatsoever in connection with this information.

TERMS and CONDITIONS

All sales of material by Service Wire Company are expressly conditioned upon the terms and conditions set forth below. Any additional or different terms or conditions set forth in the purchase order of the Purchaser or in any similar such communication are hereby objected to by Service Wire Company and shall not be binding nor effective unless assented to in writing by an officer of Service Wire Company. Terms and Conditions are subject to change without notice.

PRICES

Unless otherwise stated, all prices by Service Wire Company are subject to change without notice. Prices do not include sale, use, excise, value added or similar taxes and, where applicable, such taxes shall be as a separate item and paid by the Purchaser. Any deviation after placement of order such as changes in quantity or partial release or change in ship dates may increase price.

DELIVERY

Delivery commitments are based upon the best information present at time of quotation and/or time of order entry, but may change due to conditions beyond Service Wire Company's control. Service Wire shall have no liability whatsoever for failure to meet delivery or shipment schedules. Delivery must be within 30 days after receipt of order or manufacturing lead time. Extended requested delivery dates are subject to price revisions or cancellation of the order by Service Wire Company. Service Wire reserves the right to invoice buyer immediately if customer delays delivery. In addition after 30 days, storage charges will be charged to buyer at a minimum rate of one-half of one percent of the invoice amount per month. Buyer's order is accepted subject to Service Wire being able to obtain the necessary raw materials and subject to government priorities and other government regulations that may be issued from time to time. Availability of items quoted as "stock" are done so on a "subject to prior sales" basis.

PAYMENT

Each shipment shall be deemed to have been sold under a separate and independent contract. Payment is due and Payable thirty (30) days after invoice date unless otherwise specified. A finance charge of 1 ½% per month will be added to the unpaid balance on all accounts not paid in full on or before the due date. The finance charge is equivalent to an annual percentage rate of 18%. Time is of the essence and, in addition to any other rights, Service Wire shall further have the right, at its option, to terminate this agreement without notice to Buyer if payment is not made on or before the due date or if Buyer becomes insolvent, or if Buyer's ability to pay debts in the normal course of business otherwise becomes impaired. If, in the judgment of Service Wire, the financial condition of the Purchaser at the time of manufacture or shipment does not justify the terms or payment specified, Service Wire reserves the right to require full or partial payment before manufacture or shipment and to suspend any further performance until such payment has been received.

QUANTITY VARIATION

On all orders, quantities are subject to a quantity variation of plus or minus ten percent (10%) unless otherwise specified or agreed upon.

RETURNED GOODS

No credit will be allowed for goods returned without Service Wire's prior authorization, nor will Service Wire accept responsibility for return shipping costs. Buyer has a duty to inspect all materials upon receipt and failure to object in writing within seven (7) days of receipt shall constitute an irrevocable acceptance of the goods and a waiver of any and all claims relating to those goods. Merchandise cut to Buyer's measurements, or manufactured to Buyer's specifications, are non-cancelable and non-returnable.

LIMITED WARRANTY

All Service Wire products are carefully inspected, tested, and packed before shipment and are receipted for by carrier in first class condition. Should any goods or materials prove defective due to defects in manufacture within one (1) year from invoice date, upon written notice to Service Wire, such material shall be replaced F.O.B. original destination point. This guarantee covers the cost of replacement of the product only and does not include the cost for installation, shipping, and handling. In no event will Service Wire be liable to the purchaser or the ultimate user of its product or any other party, for any damages, including but not limited to, loss of profits, loss of use, cost to repair, replacement of damaged goods or property; or any other incidental or consequential damages arising out of the use of the product, even if Service Wire its agents or representatives, has been advised of the possibility of such damages. This warranty is expressly in lieu of all other warranties expressed or implied including the warranties for labor charges, or merchantability, and of fitness for a particular purpose, and shall be voided if any work or modification is performed on the product without factory authorization. This limited warranty represents the complete and exclusive agreement between Service Wire and Buyer concerning warranties of the product and supersedes any proposal or prior agreement, oral or written, and any communications between Service Wire and Buyer concerning the product.

CANCELLATION

Orders for Product cut to Buyer's measurements or manufactured to Buyer's specifications may not be cancelled. All other orders may be cancelled by Purchaser based upon payment to Service Wire of reasonable and proper cancellation charges pursuant to Service Wire's pricing policy or as determined by mutual agreement.

ASSIGNMENT

Any assignment of any contract/order, or any right thereunder, by the Purchaser without the advance written consent of Service Wire shall be void.

HAZARDOUS BUSINESS

Service Wire's products are designed and manufactured for use in standard industrial and commercial applications. If our products are to be applied in any location which might be of a hazardous nature, such as atomic installations, commercial or military aircraft, missile installations, space explorations or other critical applications where a failure of a single component could cause substantial harm to persons or property, Service Wire disclaims all responsibility. Such concurrence must be signed by an officer of Service Wire Company.

GENERAL TERMS

Any of the terms and provisions of Buyer's order which are inconsistent with the terms and provisions hereof shall not be binding on Service Wire Company and shall not be considered applicable to the sale or shipment of the merchandise referred to herein. Unless Buyer shall notify Service Wire in writing to the contrary as soon as practicable after receipt of quotation by Buyer, acceptance of the terms and conditions hereof by Buyer shall be indicated, and, in the absence of such notification, the sale and shipment by Service Wire of the merchandise covered hereby shall be conclusively deemed to be subject to the terms and conditions herein. A standard, form purchase order or similar document shall not constitute written objection to the terms herein. Rather a written objection must be separately stated, and addressed to "Attn: Credit Manager, Service Wire Company, 310 Davis Road, Culloden, WV 25510," and must state with particularity those specific terms to which Buyer objects. In the event this written notice is not timely sent, before shipment or delivery of the product, then Buyer waives any and all rights to object to the terms herein.

ATTORNEY'S FEES, JURISDICTION AND VENUE

Buyer agrees that in the event there is a dispute between Buyer and Service Wire, each party will pay their individual costs of such proceedings, including but not limited to attorney fees, court costs and other costs (including without limitation all expert witness or other fees incurred, and any and all costs charged by any law firm or attorney. Buyer agrees that any and all disputes with Service Wire, including not just contract but also tort claims, shall be resolved in the state or federal courts situated in Cabell County, West Virginia, and that these courts shall have the exclusive jurisdiction over all such disputes and Buyer consents to personal jurisdiction in these courts. Any legal action brought by Buyer against Seller shall be filed in the above referenced jurisdiction within one (1) year after the cause of action arises or it shall be deemed forever waived.

INTELLECTUAL PROPERTY AND INDEMNIFICATION

Service Wire Company makes no warranty or representation with regard to any patent, trademark, copyright, trade dress, or trade secret, relating to or claimed to arise from any product sold to Buyer. Service Wire will not and does not indemnify or otherwise hold harmless Buyer from any claim of misappropriation or infringement of any patent, trademark, trade dress, trade secret, copyright or other rights relating to any product. Buyer agrees that Buyer will not make any such claim, or seek any such indemnification, and that such a claim or demand by Buyer constitutes a breach of these Standard Terms, and that Buyer shall pay all attorney fees and other court costs incurred by Service Wire in defending against any such claim or demand, whether or not a legal action is commenced or filed.