

LEFT SIDE VIEW

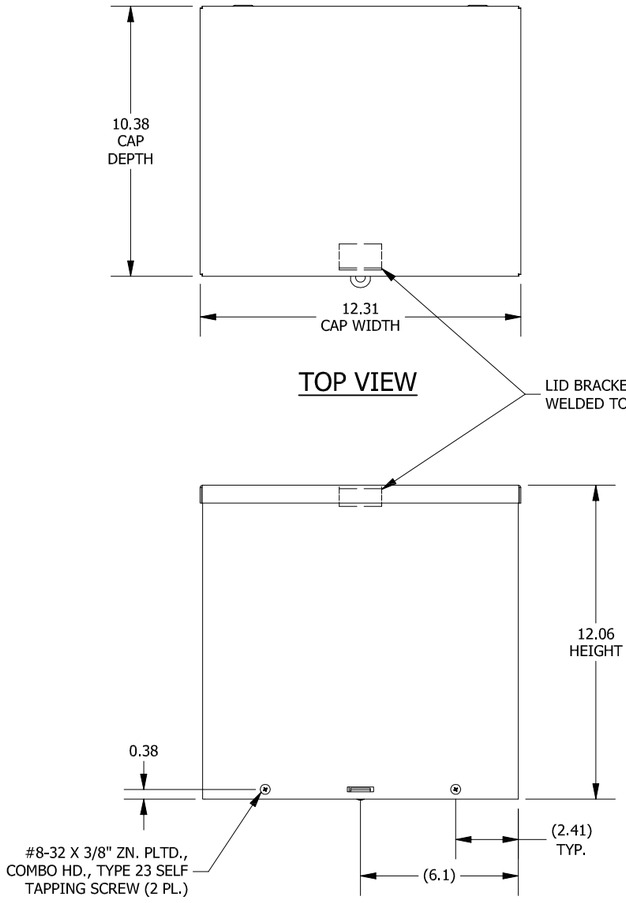

TOP VIEW

FRONT VIEW

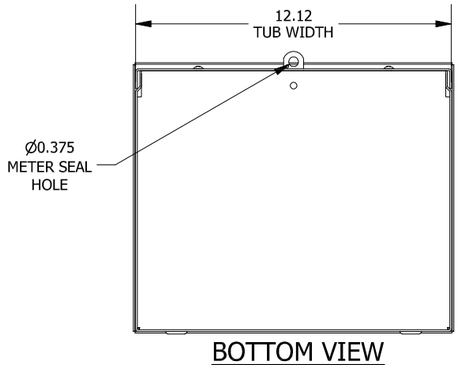

BOTTOM VIEW

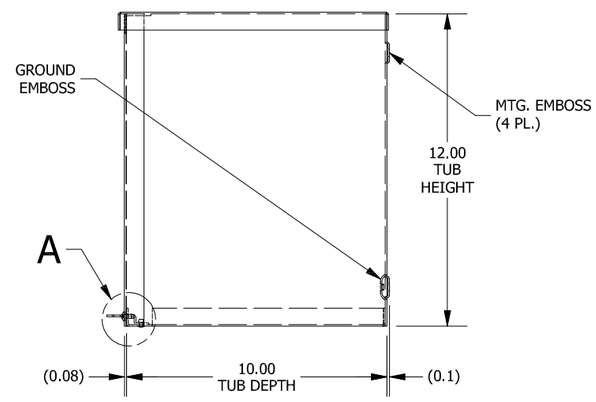

RIGHT SIDE VIEW

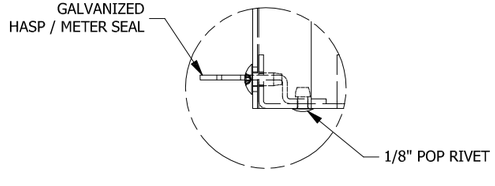

DETAIL A
(METER SEAL DETAIL)

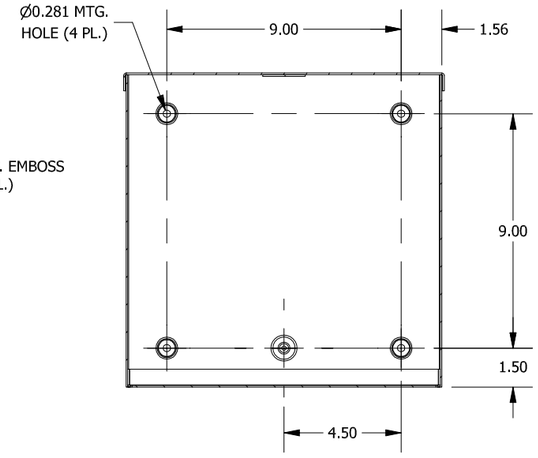

SECTION A-A
(INSIDE BACK OF ENCL.)

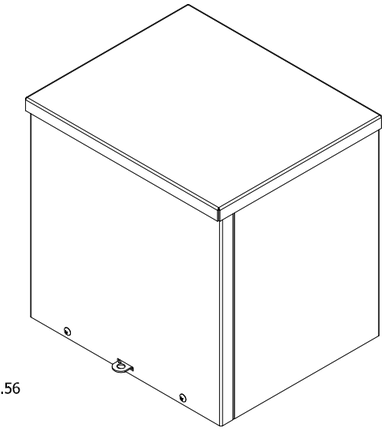

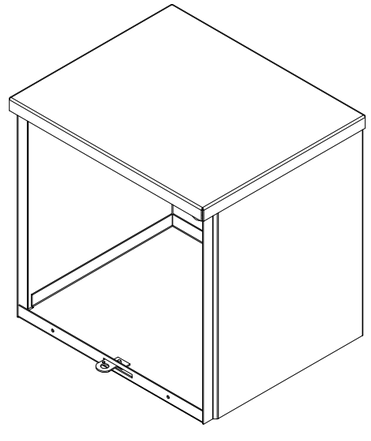

PART#: RSC121210
(DATA SUBJECT TO CHANGE WITHOUT NOTICE)

THIS DRAWING IS PROPERTY OF HUBBELL INC. WIEGMANN
ALL INFORMATION IS PROPRIETARY AND NOT TO BE DUPLICATED